UEBE 110 B-Type Montageanleitung / Notice de montage / Assembly instruction
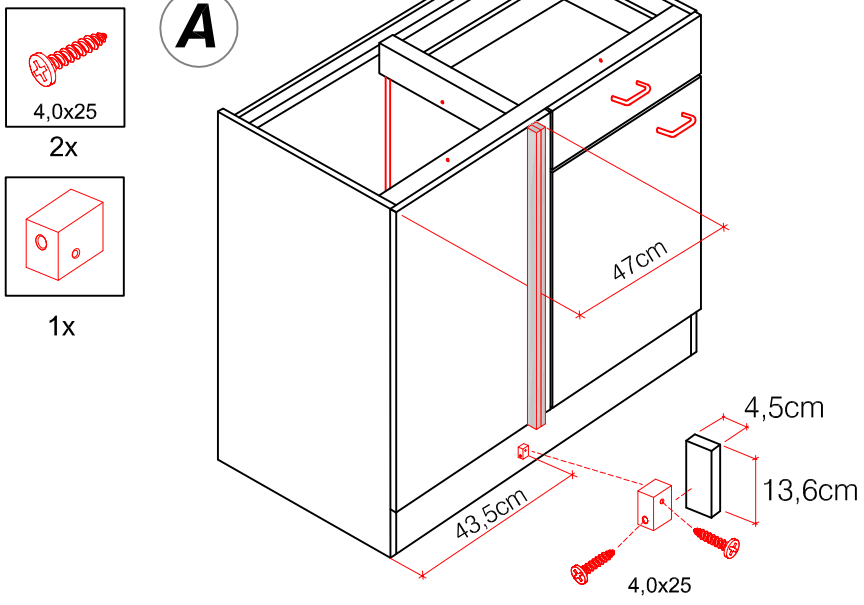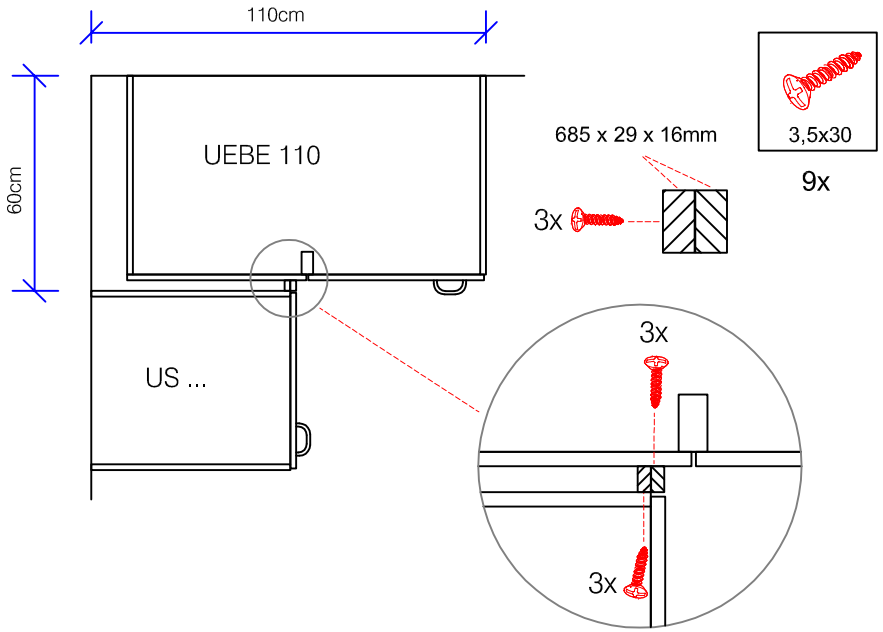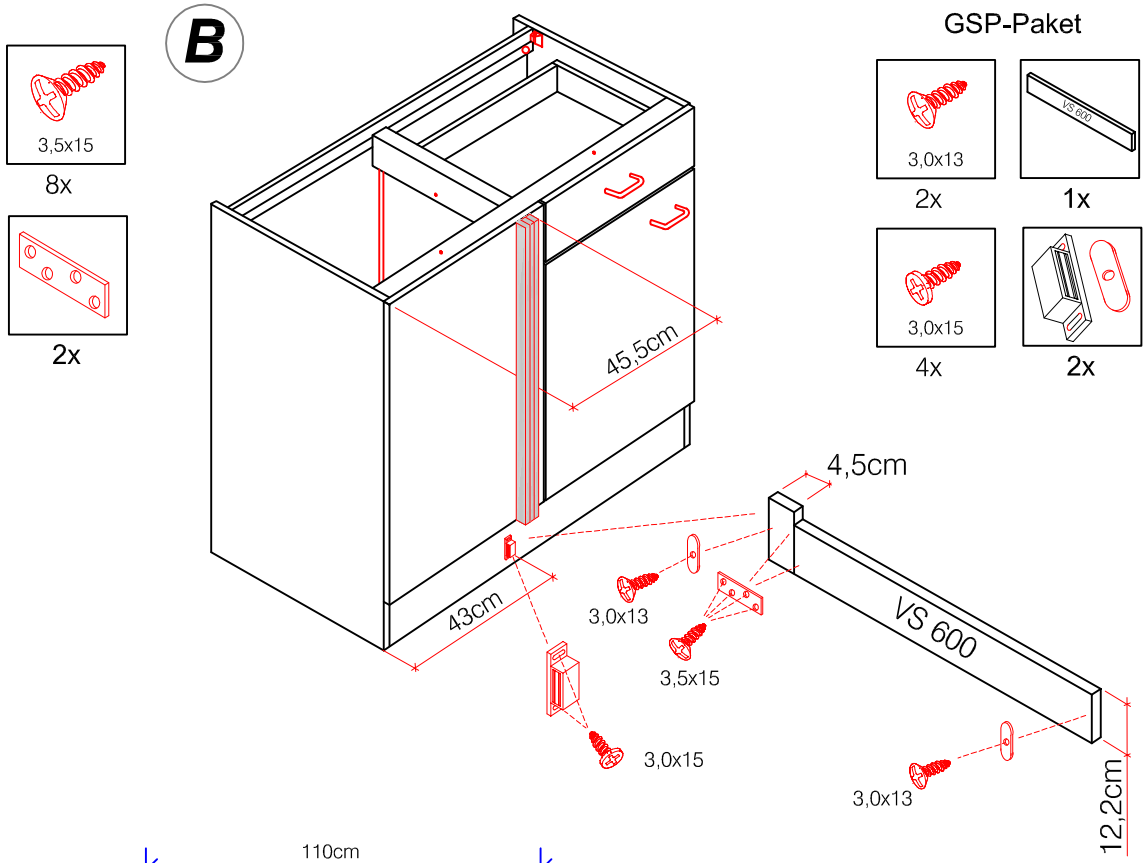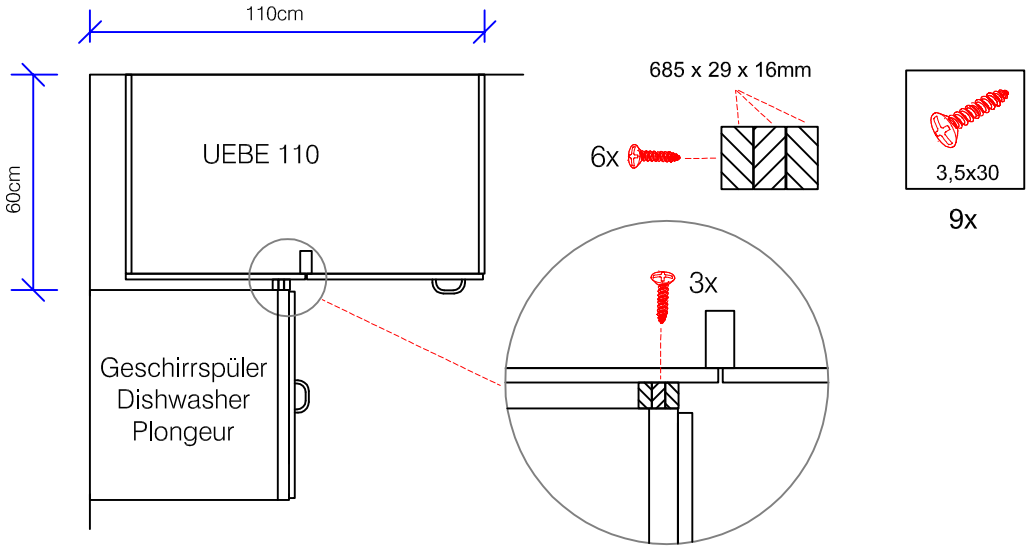
Varianto