04220248-01

BDSK Handels GmbH & Co. KG
Mergentheimer Straße 59
DE-97084 Würzburg
Germany
E-Mail: info@moemax.at



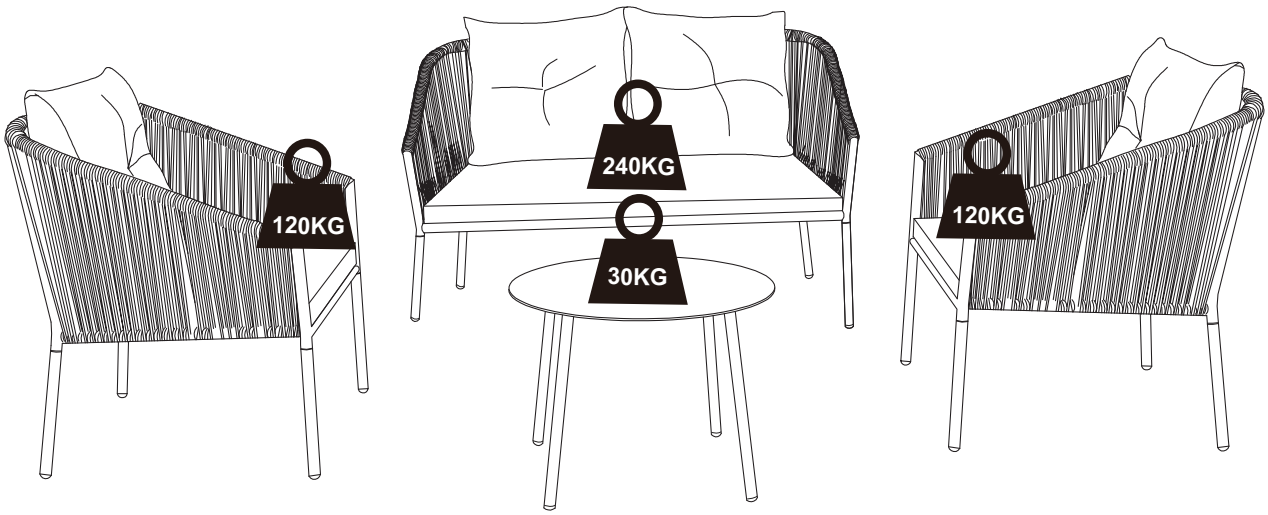

A	B	C	D	E	F	G	H
							
x1	x2	x12	x1	x4	x2	x1	x4
①	②	③	④				
 M6X15		 M4	 Ø25*2.0mm				
x12	x12	x1	x12				

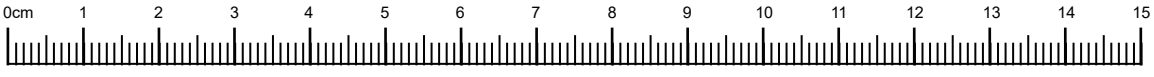

04220248-01

A	B	C	D	E
				
x1	x2	x12	x1	x4
①	②	③	④	
 M6X15		 M4	 Ø25*2.0mm	
x12	x12	x1	x12	

①

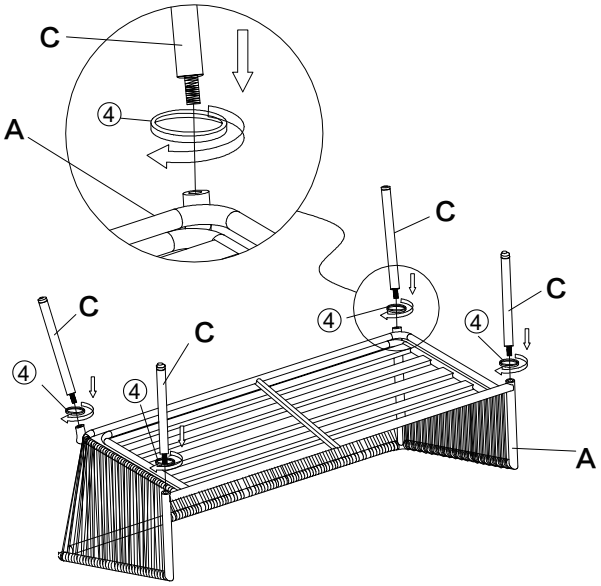

②

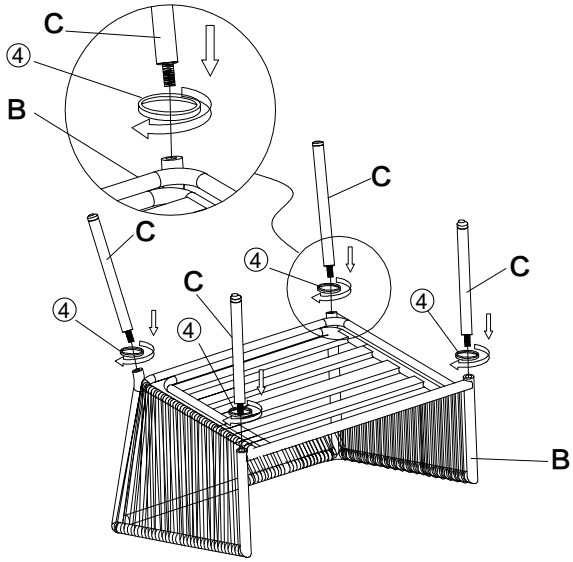

③

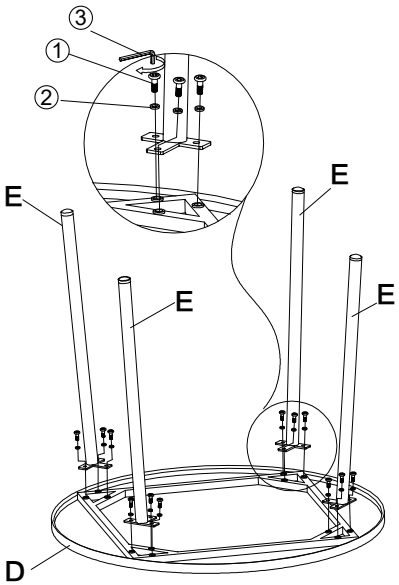

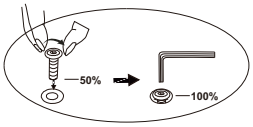

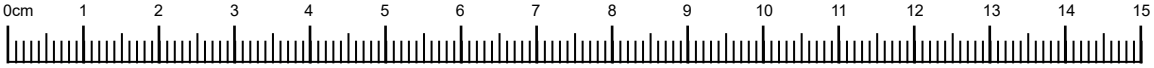

04220248-01

F	G	H
		
x2	x1	x4

