06390093/01

BDSK Handels GmbH & Co. KG
Mergentheimer Straße 59
DE-97084 Würzburg Germany
info@moemax.at

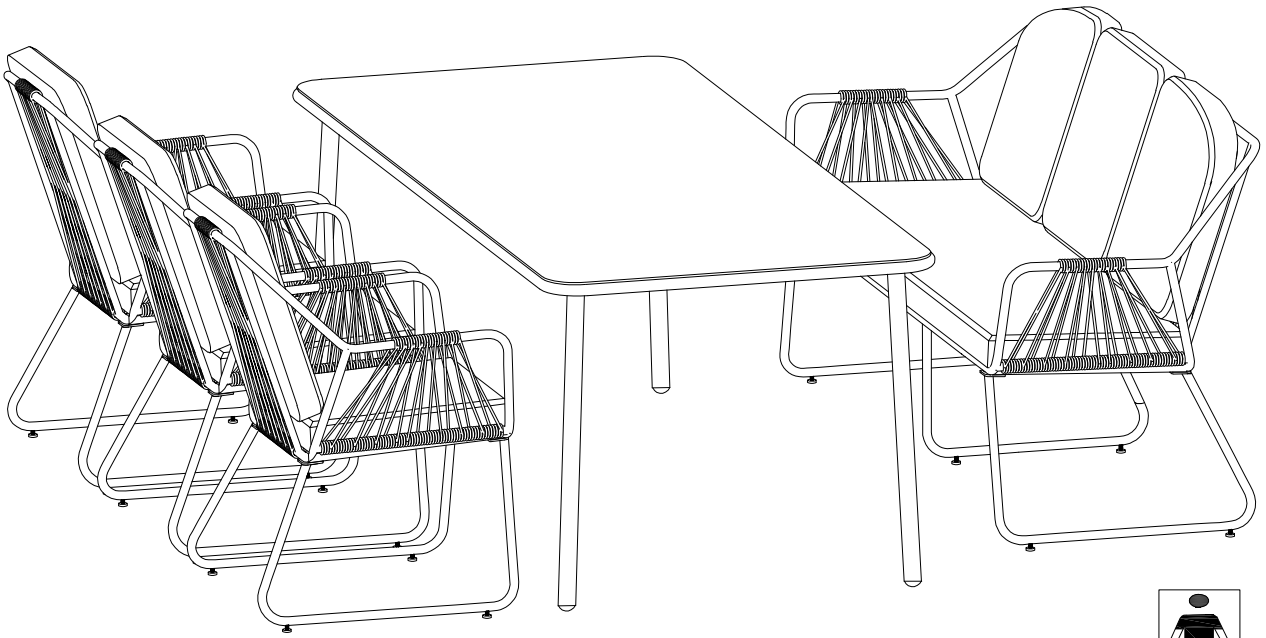











A	X1	**B**	X3	**C**	X4	**D**	X4
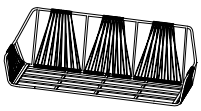 1/2		 1/2		 1/2		 1/2	
E	X1	**F**	X1	**G**	X2	**H**	X1
 1/2		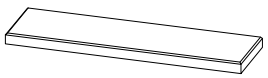 1/2		 1/2		 1/2	
I	X3	**J**	X35	**K**	X34	**L**	X2
 1/2		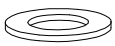 1/2		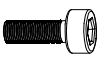 1/2		 1/2	
		M6*14MM		M6*15MM		M6	
M	X1						
 1/2							
M6*12MM							

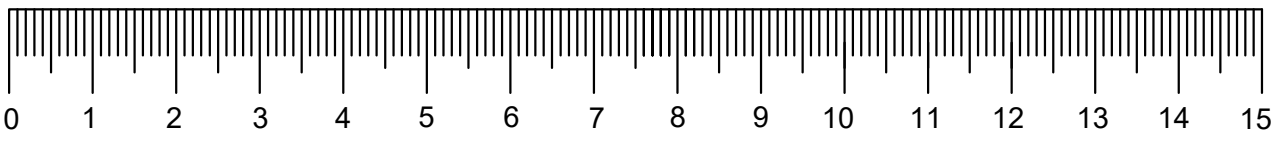

06390093/01

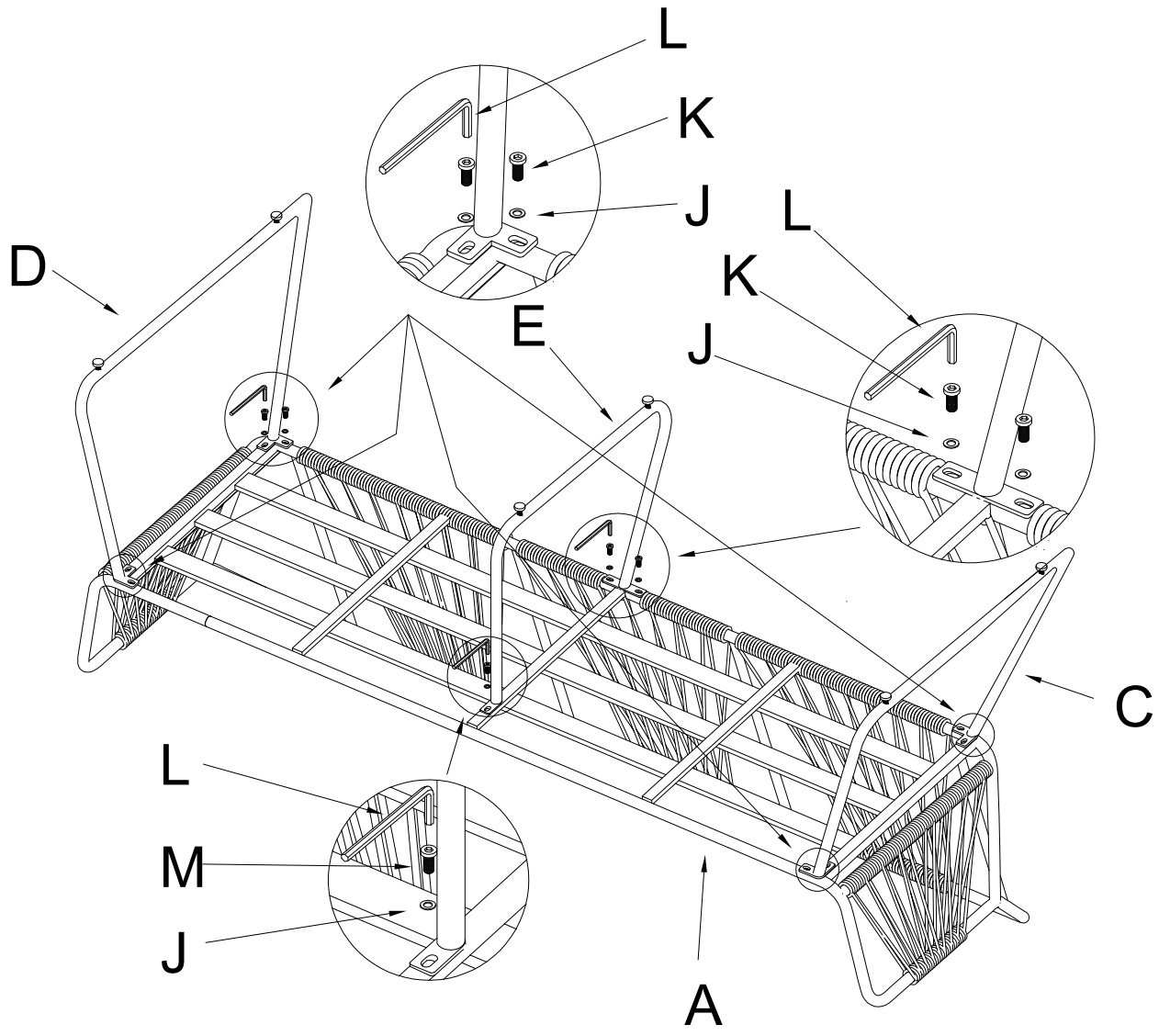

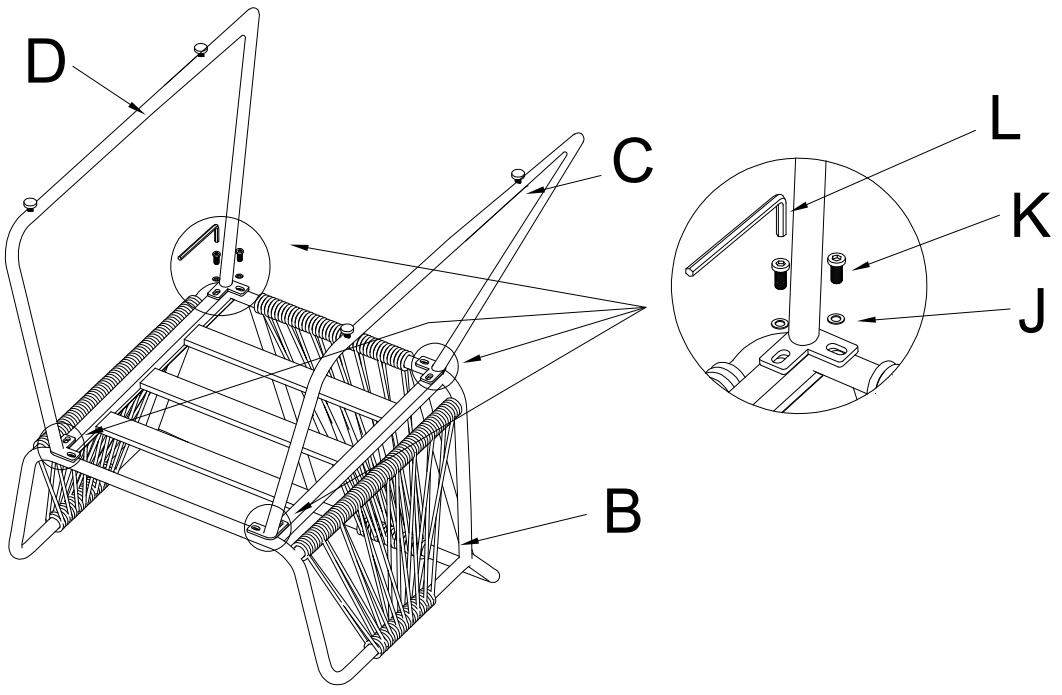

06390093/01

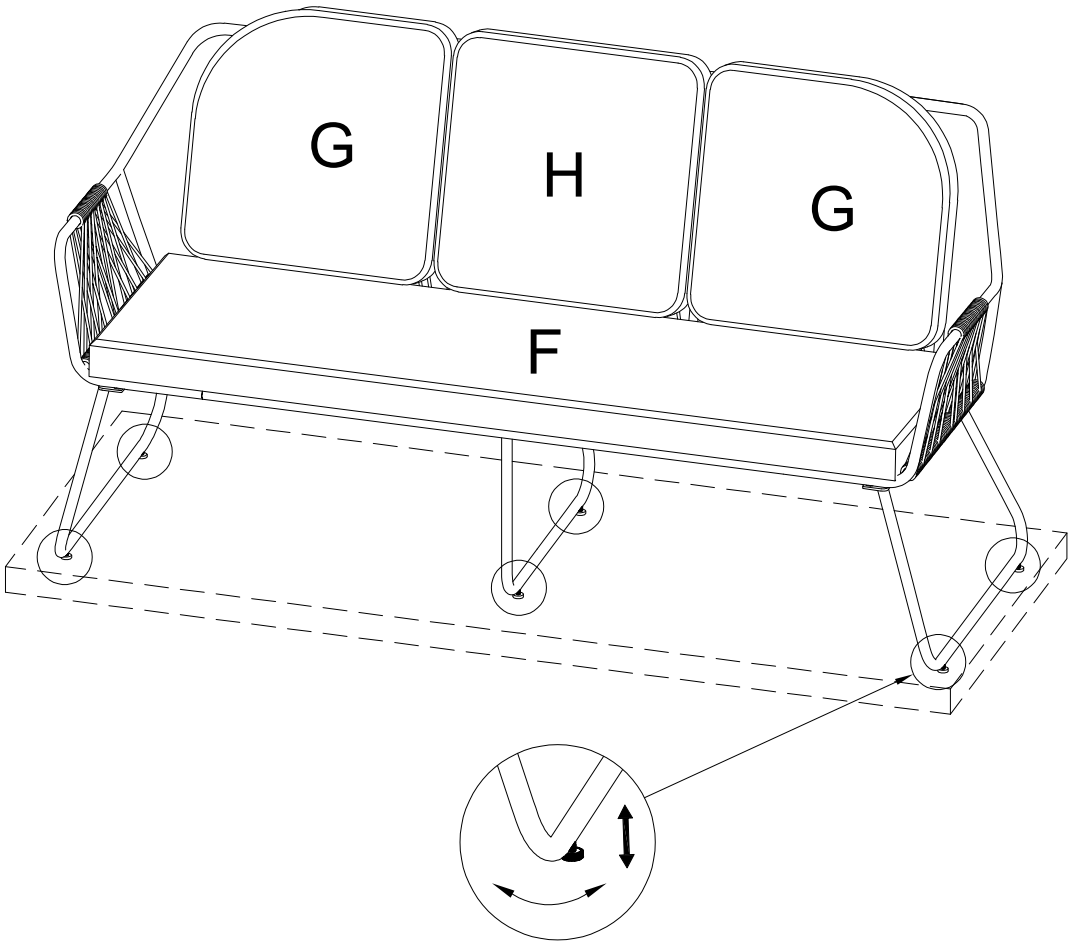

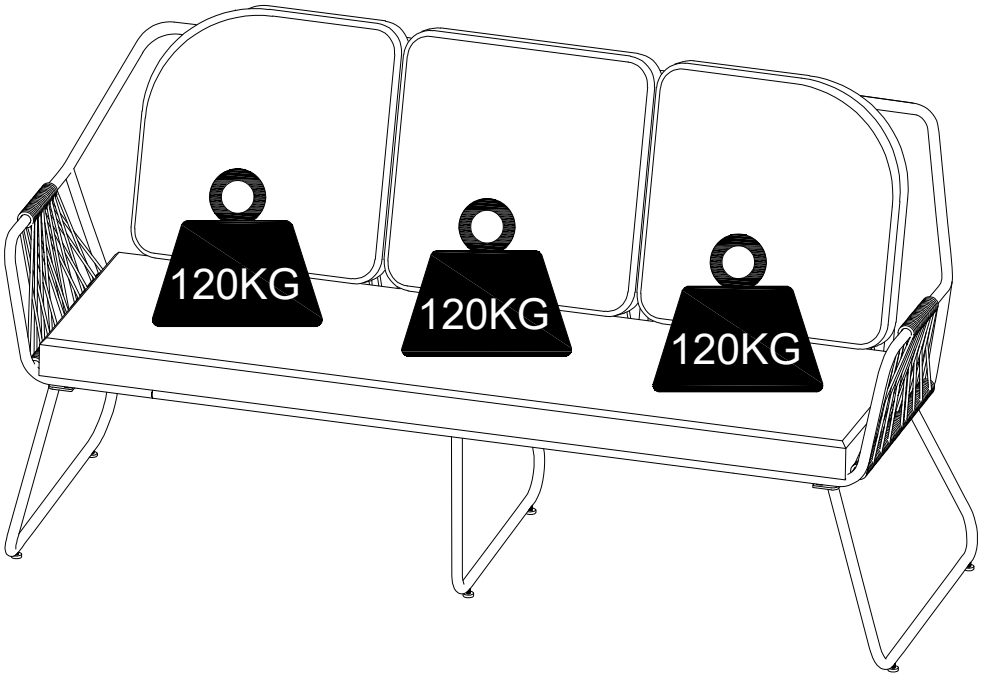

06390093/01

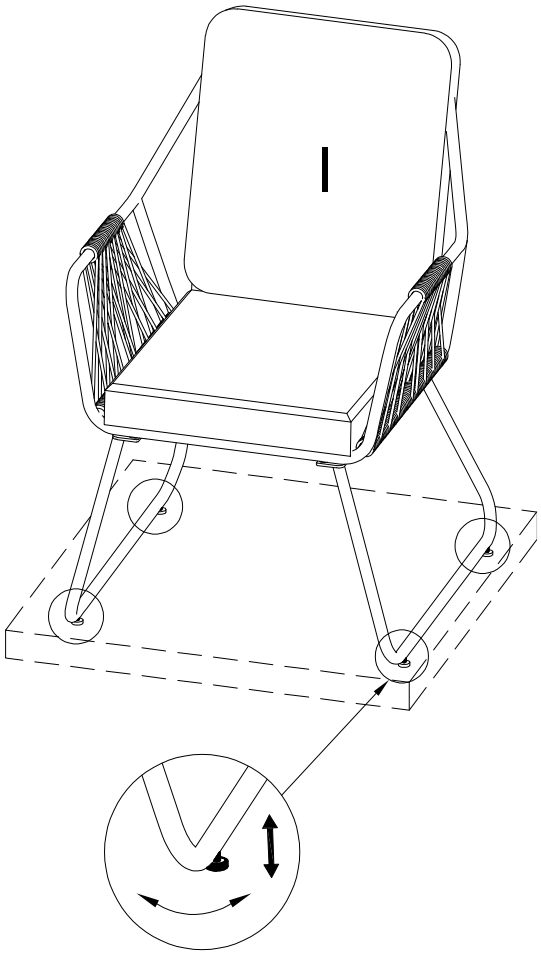

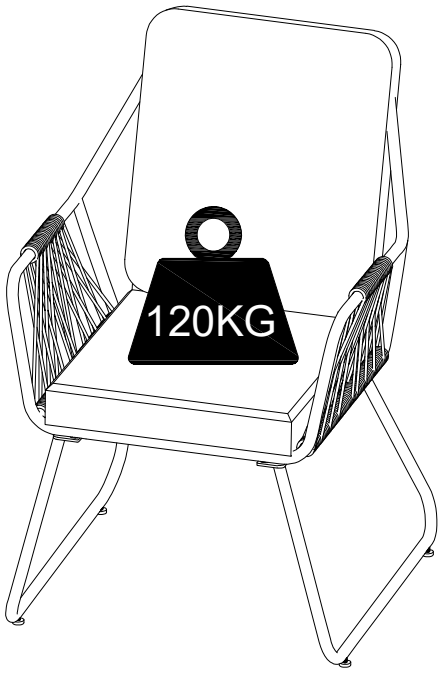

06390093/01

BDSK Handels GmbH & Co. KG
Mergentheimer Straße 59
DE-97084 Würzburg Germany
info@moemax.at

möma

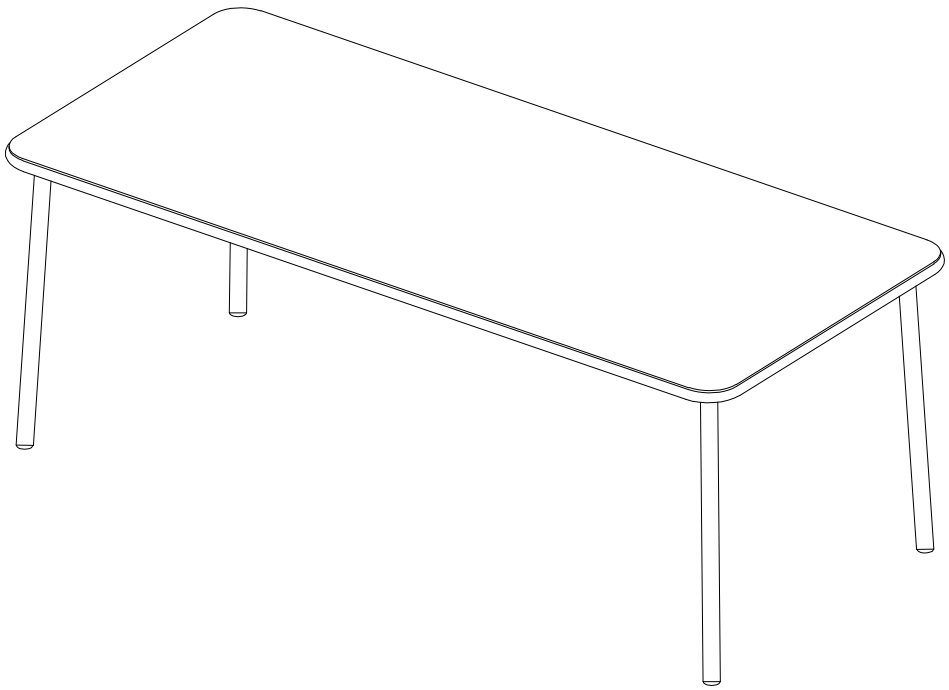



A	X1	B	X4	C	X1	D	X16
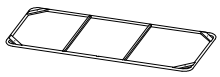 2/2		 2/2		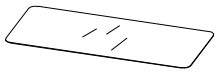 2/2		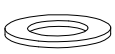 2/2	
						M6*14MM	
E	X16	**F**	X1				
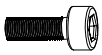 2/2		 2/2					
M6*15MM		M6					

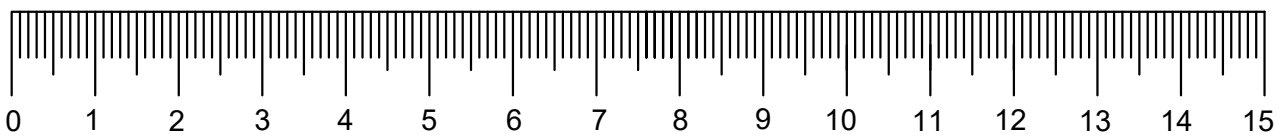

06390093/01

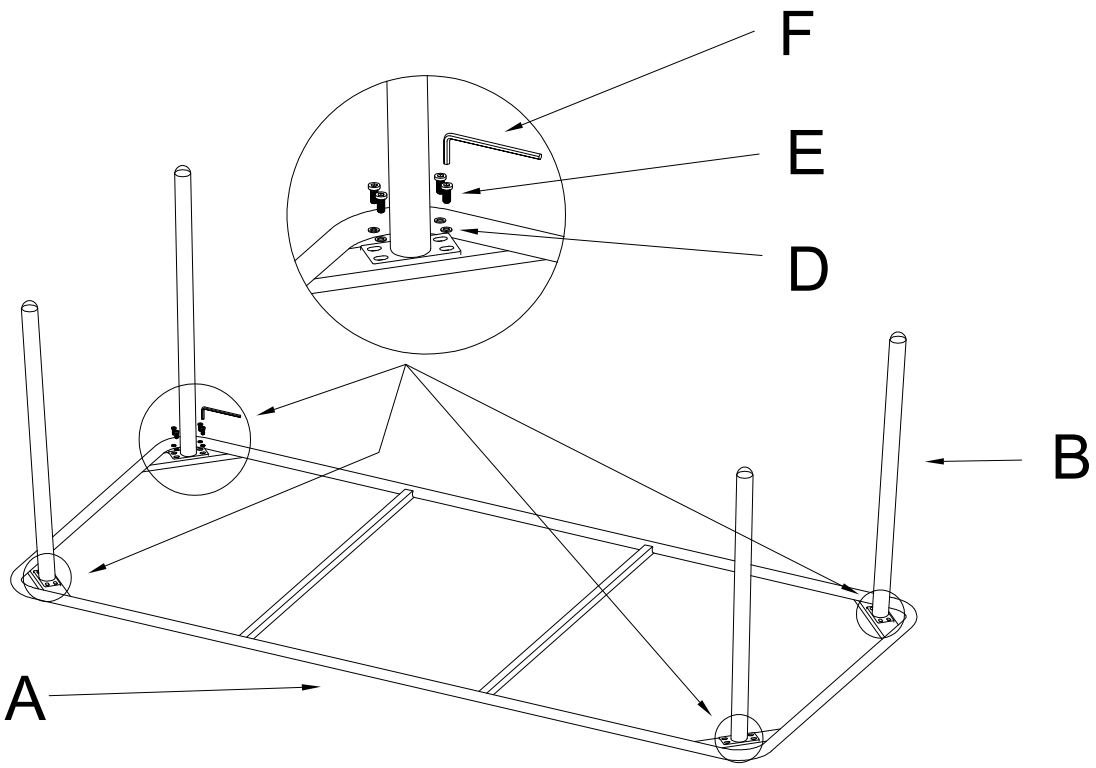

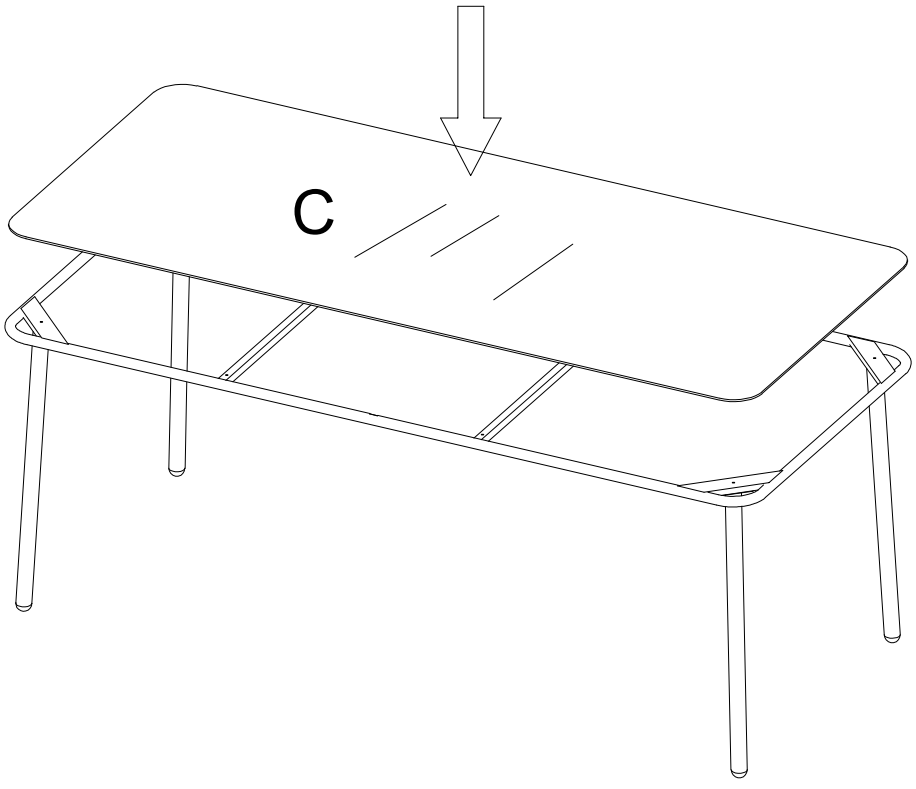

06390093/01

