MÖMAX

BDSK Handels GmbH & Co. KG
Mergentheimer Straße 59
DE-97084 Würzburg Germany

CH4S17HG

05750487-01

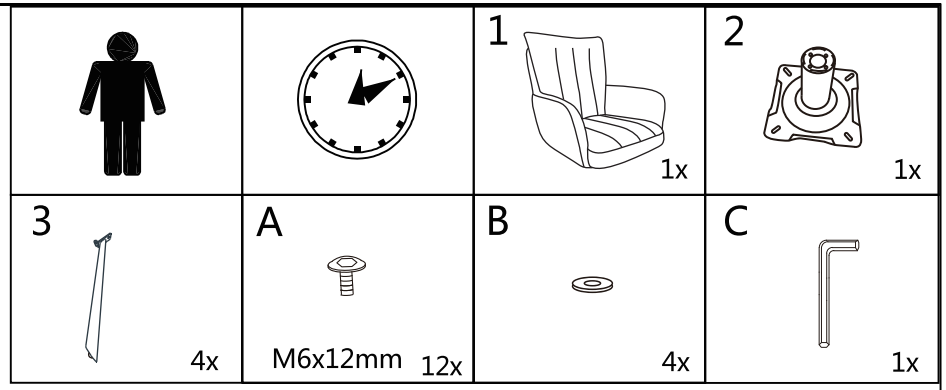

STEP 1

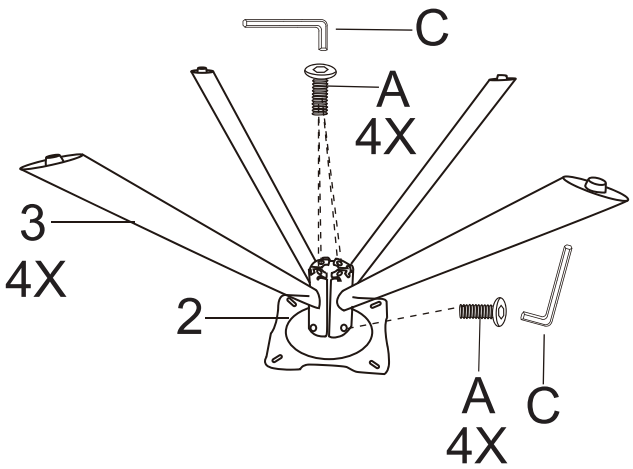
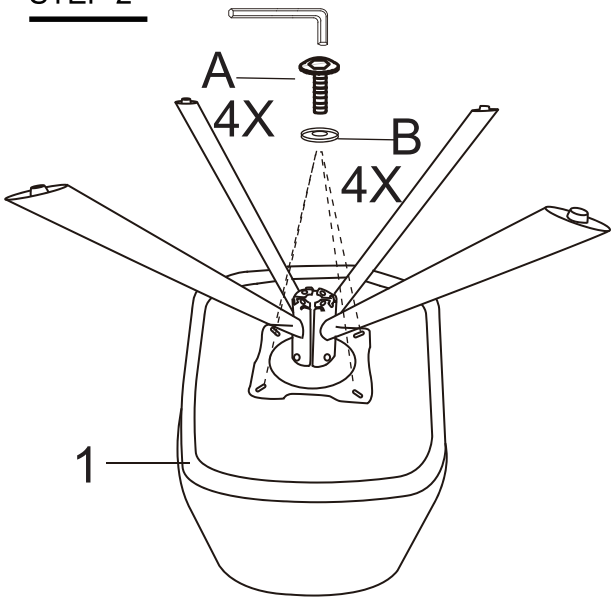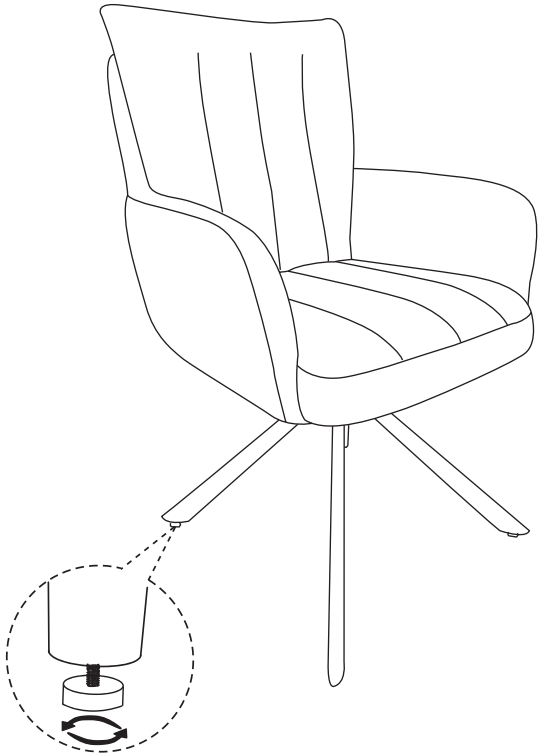
STEP 2