10780010/01

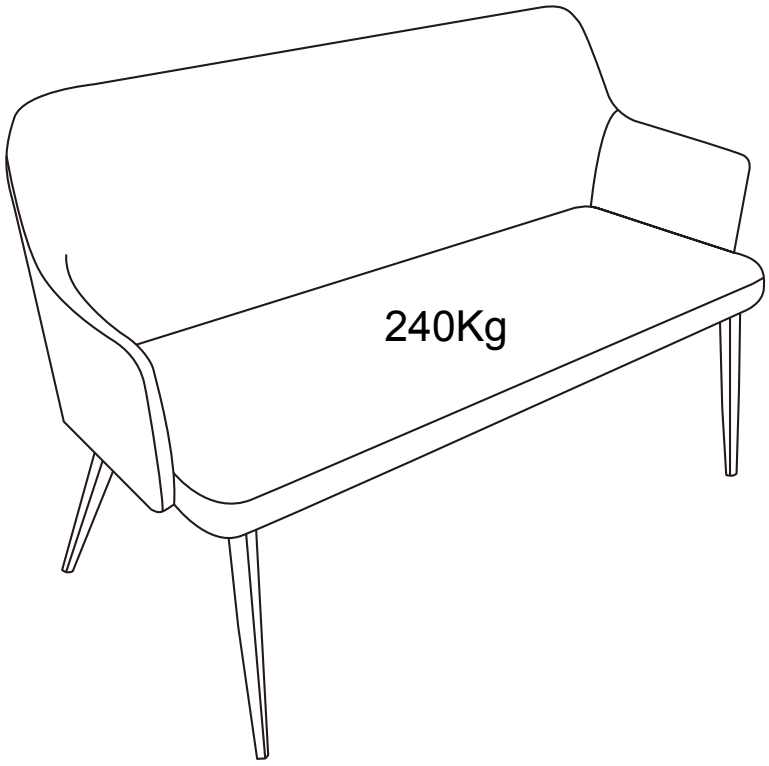

① 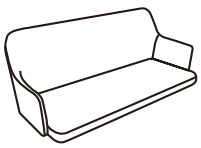	x1	②	x2
③	x2		
A M6X16mm	x12	B 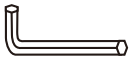	x4

①

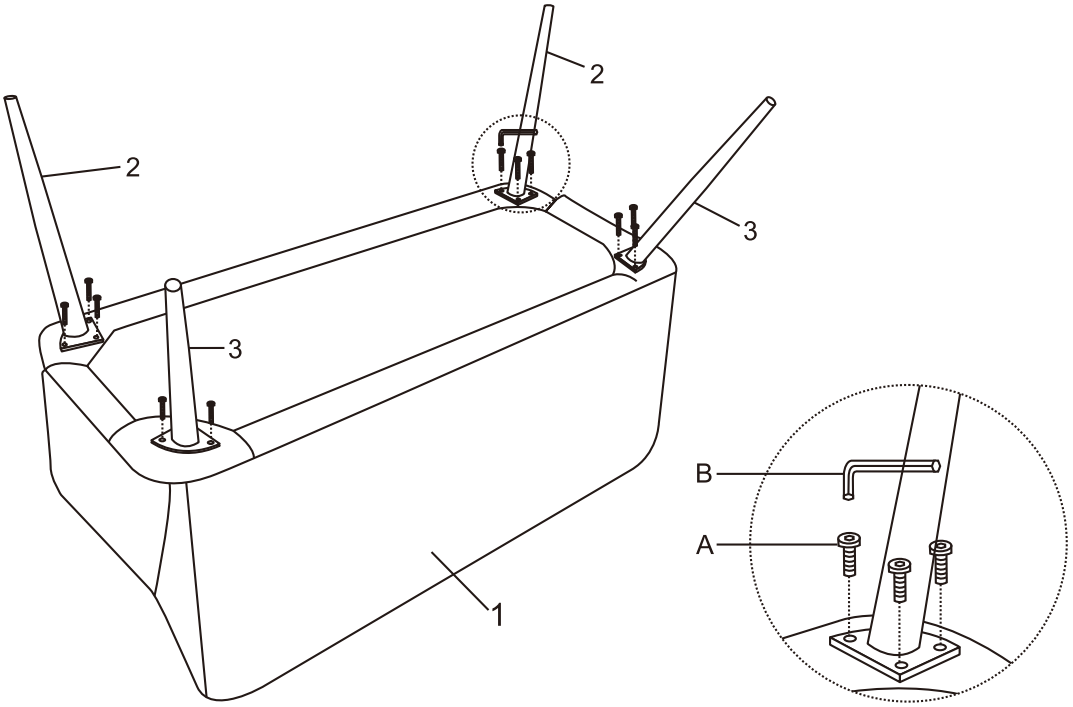

A	M6*16mm	12 PCS
B		1 PC
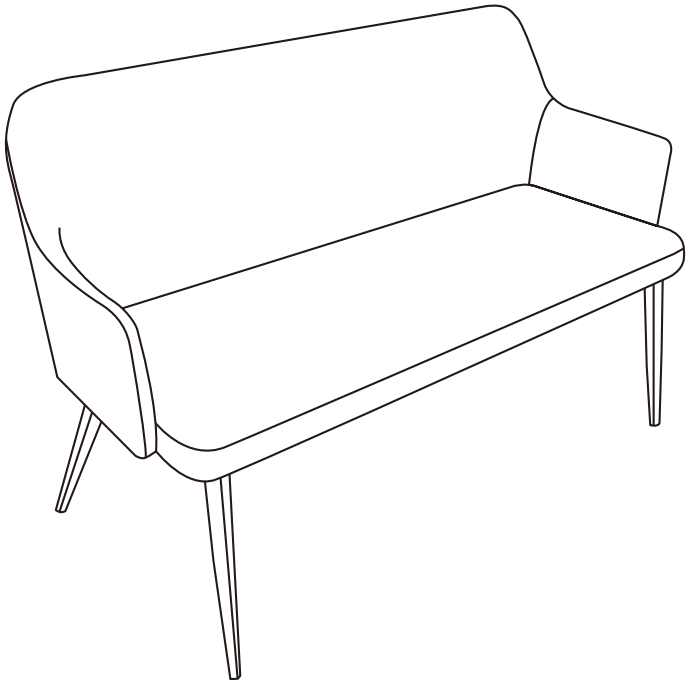
②