Art No	Description
88888-287	SP- Estella Sofa Table-Screw Set
88888-288	SP- Estella Sofa Table-Plastic Feet

VENTURE DESIGN
HOME & INTERIOR

19933-568

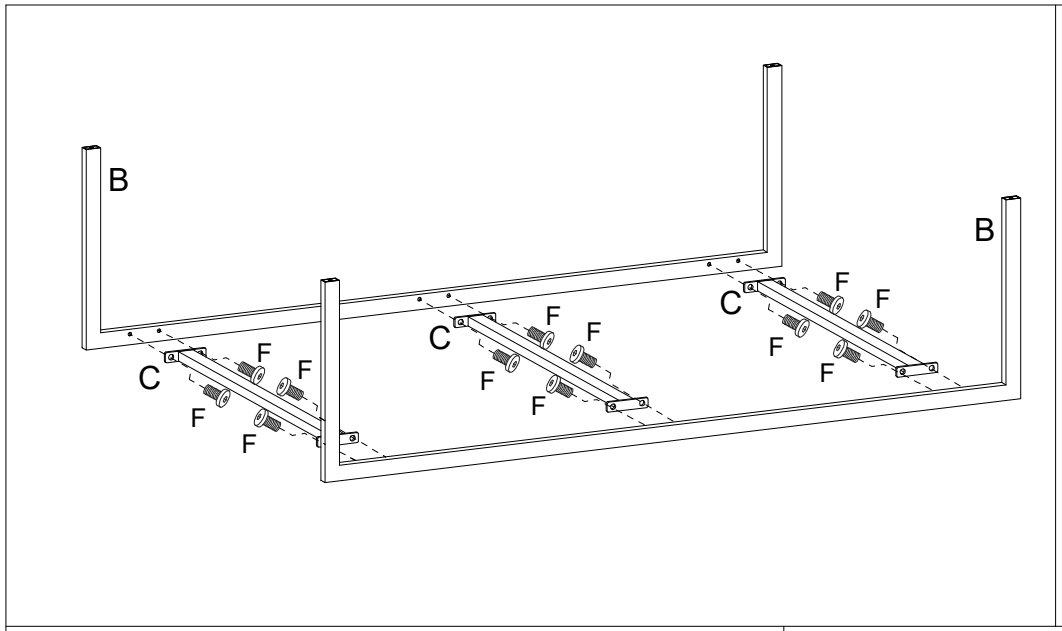

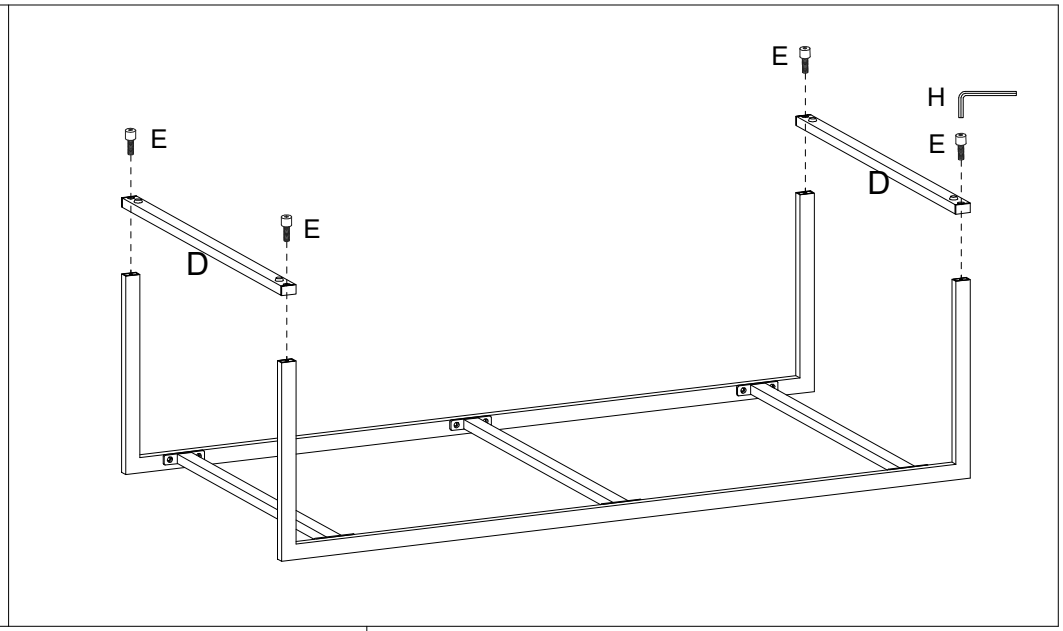

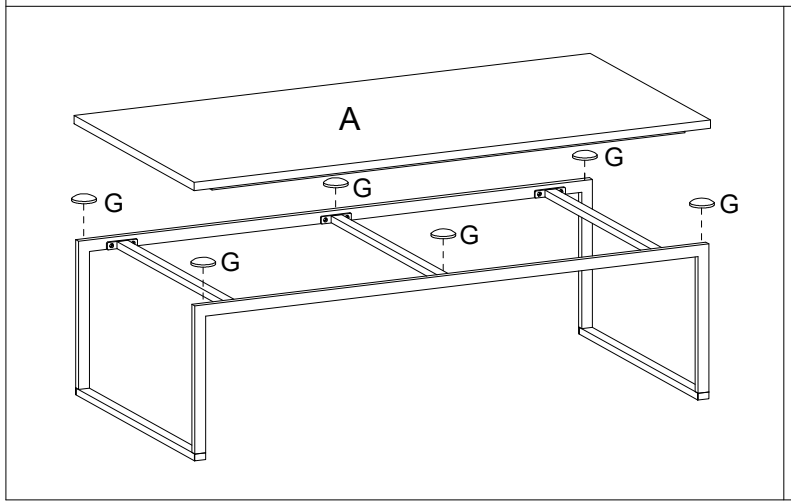

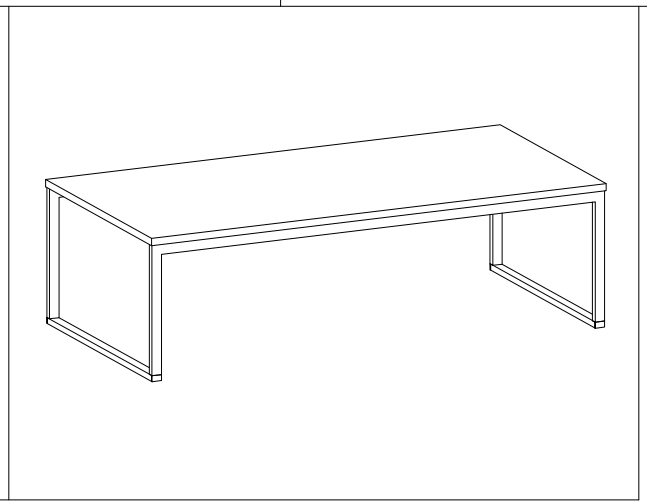

A		1	
B		2	
C		3	
D		2	
E		4	88888-287
F		12	88888-287
G		6	88888-288
H		1	88888-287