001R0005/01
CARLOS

XXXLutz KG
Roemerstrasse 39
AT-4600 Wels
Austria







①X22 M6*10	②X48 M6*15	③X12 M6*30
④X6 M6*35	⑤X12 M6*50	⑥X100 M6
⑦X1	⑧X6 M6	⑨X6
⑩X58		

1/3	1/3	2/3	2/3	3/3
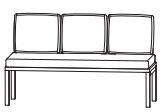		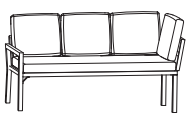	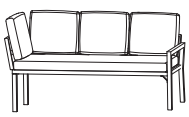	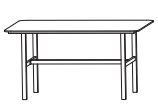



A X1 	B X2 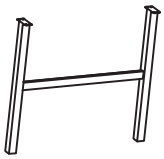	C X1 
D X2 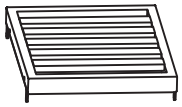	E X4 	F X1 
G X4 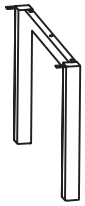	H X1 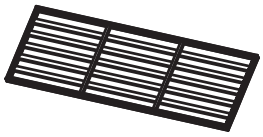	I X11 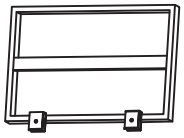
J X1 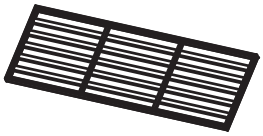	K X3 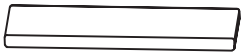	L X 9 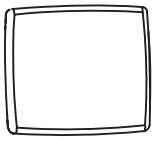
M X2 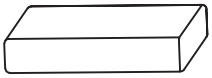	N X 4 	P X1 
O X1 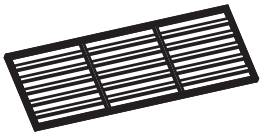	Q X 2 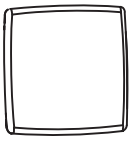	W x 4 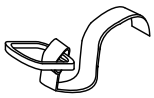



A		X1
B		X2
C		X1
②	 M6*15	X24
⑥	 M6	X24
⑦		X1
⑩		X8

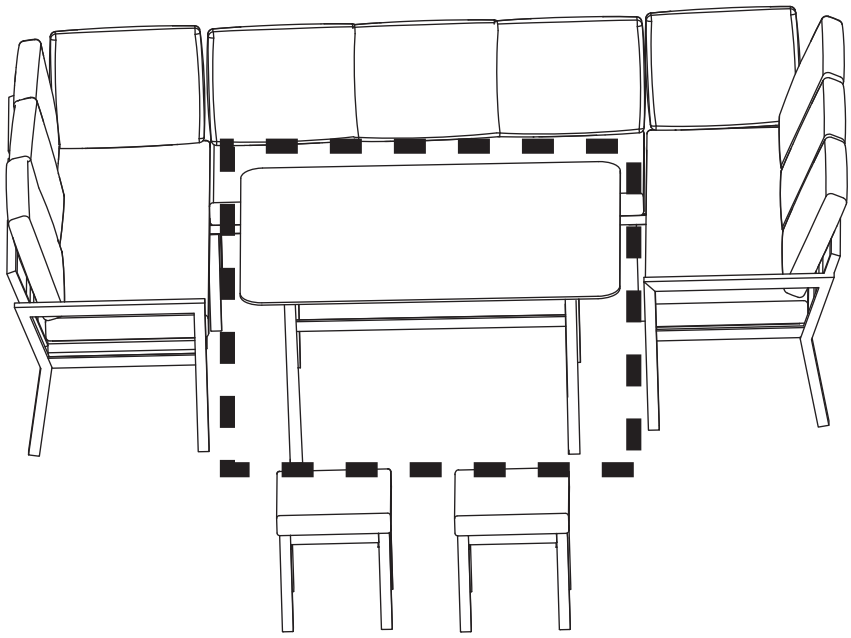



1

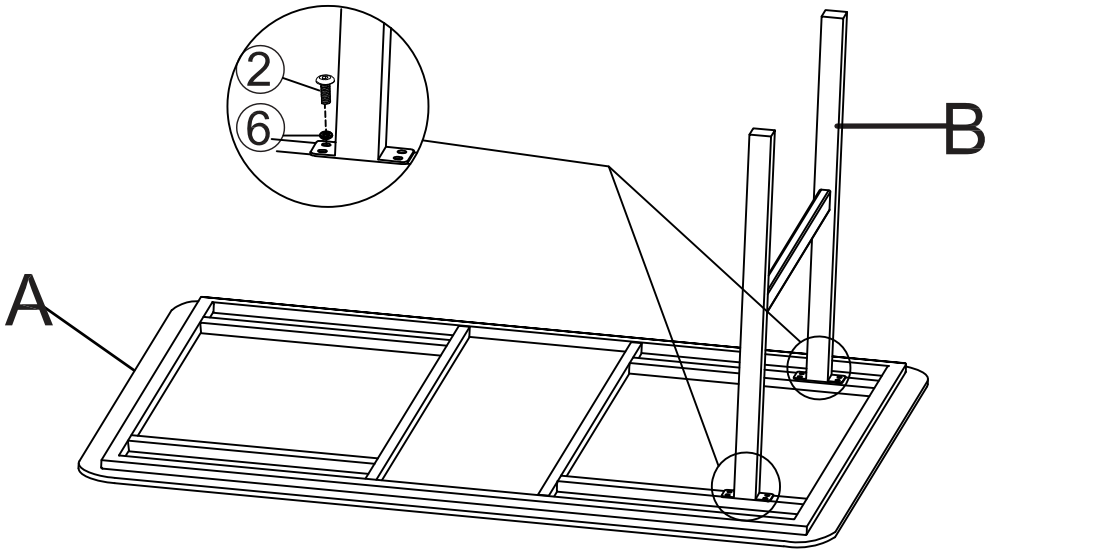

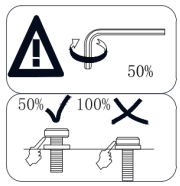

2

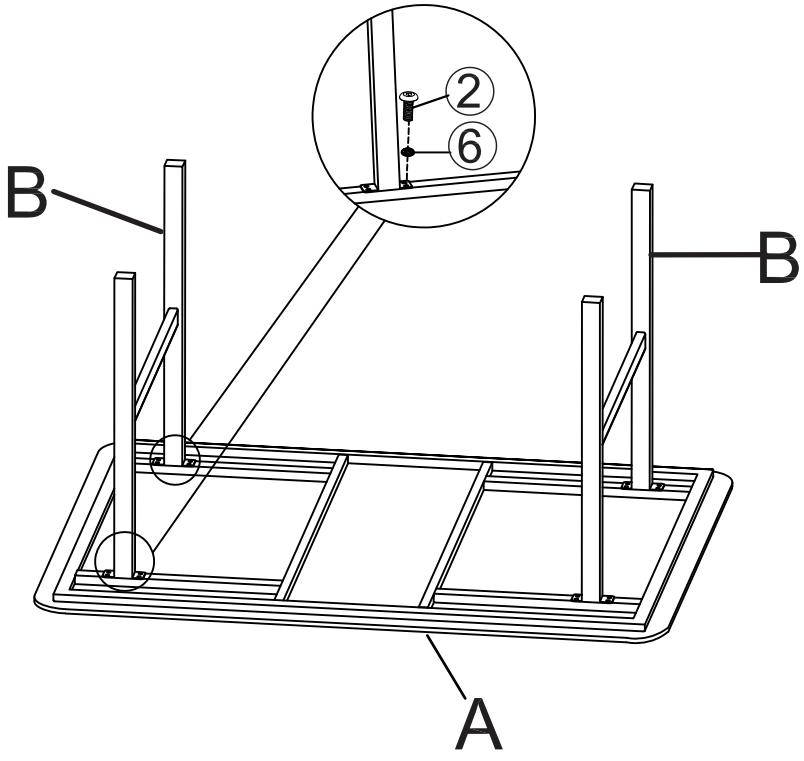

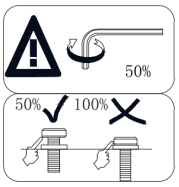

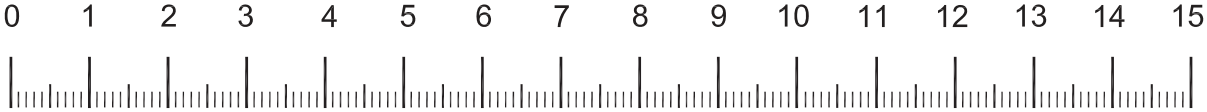

3

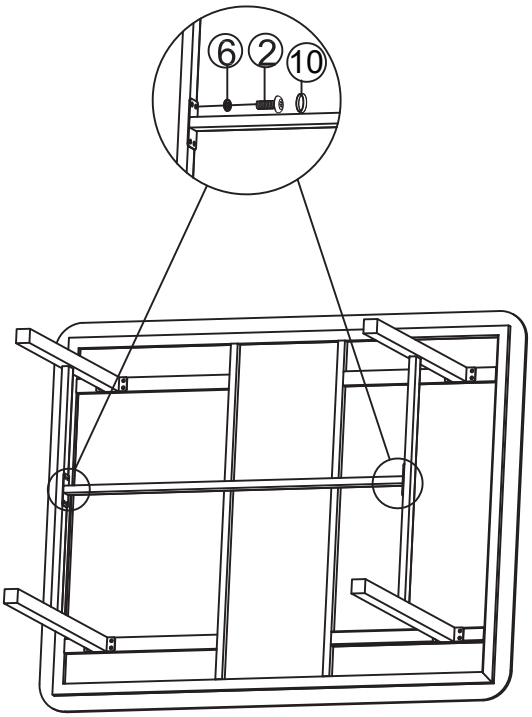

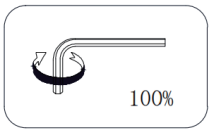

4

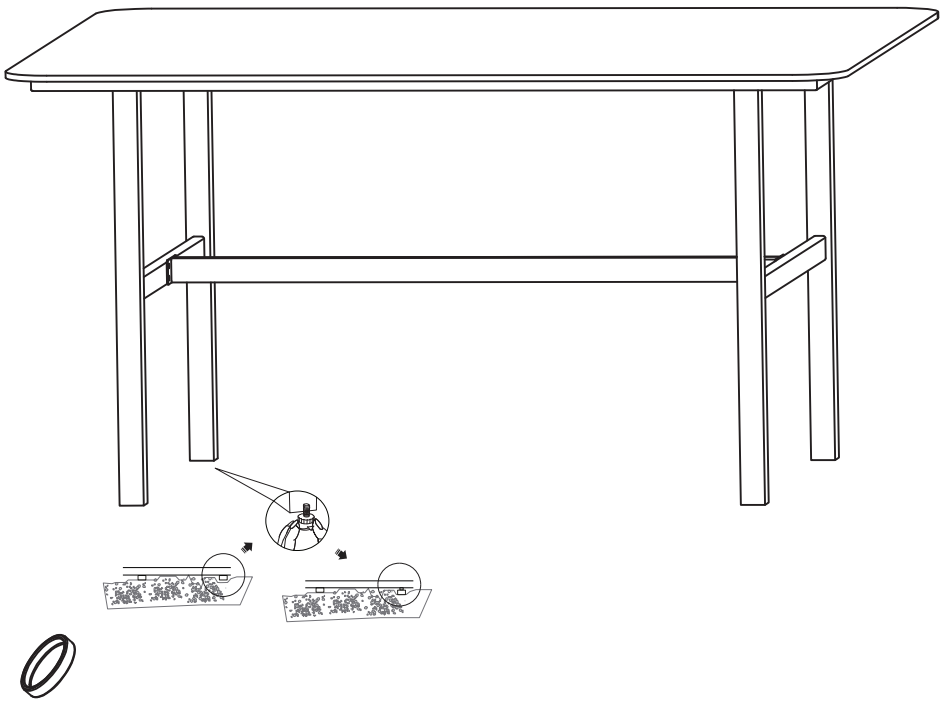

0 1 2 3 4 5 6 7 8 9 10 11 12 13 14 15

D		X2
E		X2
M	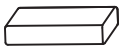	X2
②	 M6*15	X8
③	 M6*30	X12
⑥	 M6	X 20
⑦		X1
⑩		x8

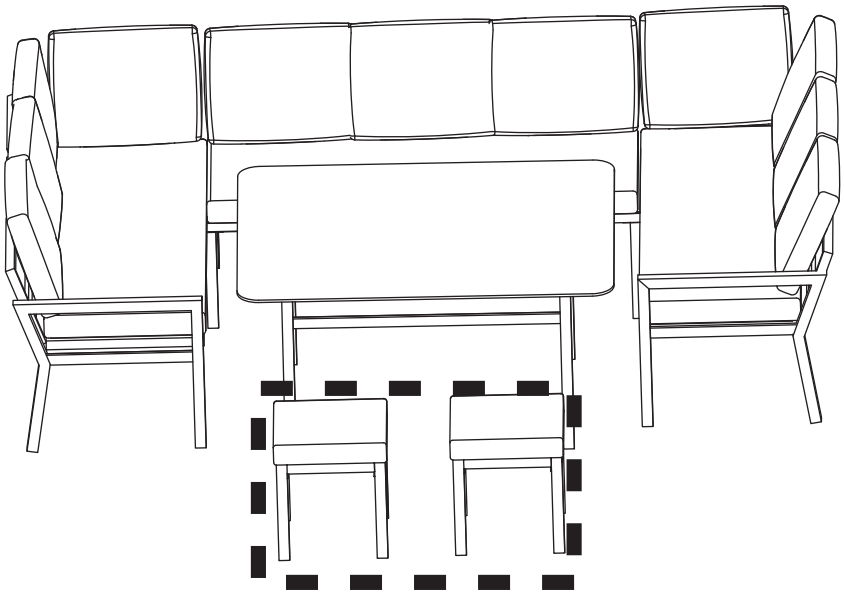



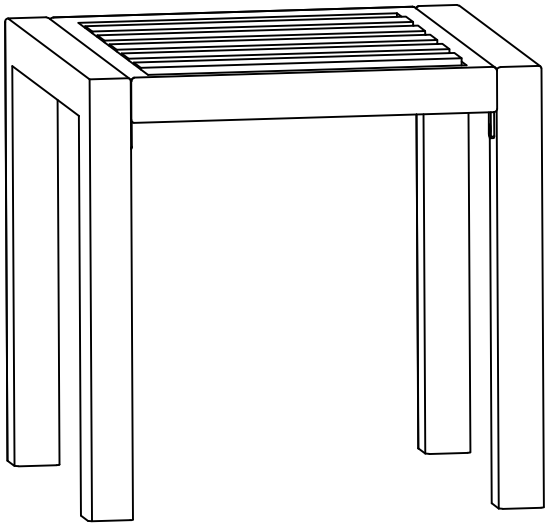

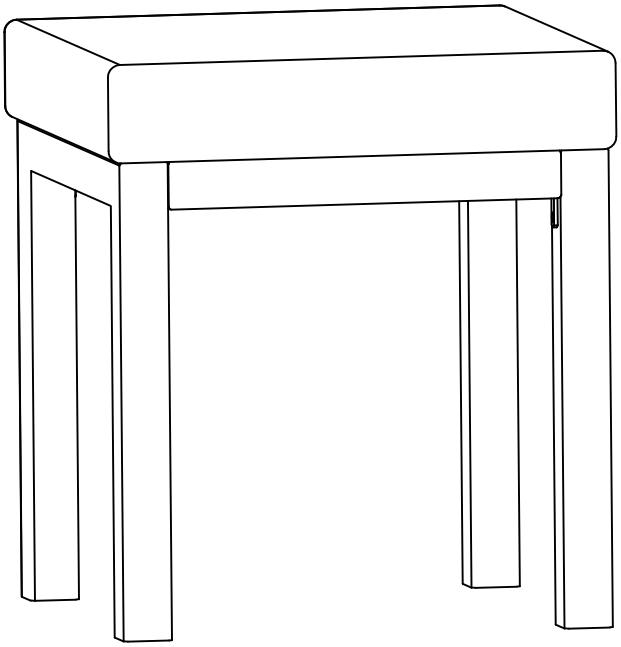


0 1 2 3 4 5 6 7 8 9 10 11 12 13 14 15

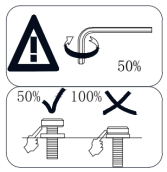
50%
50%
100%

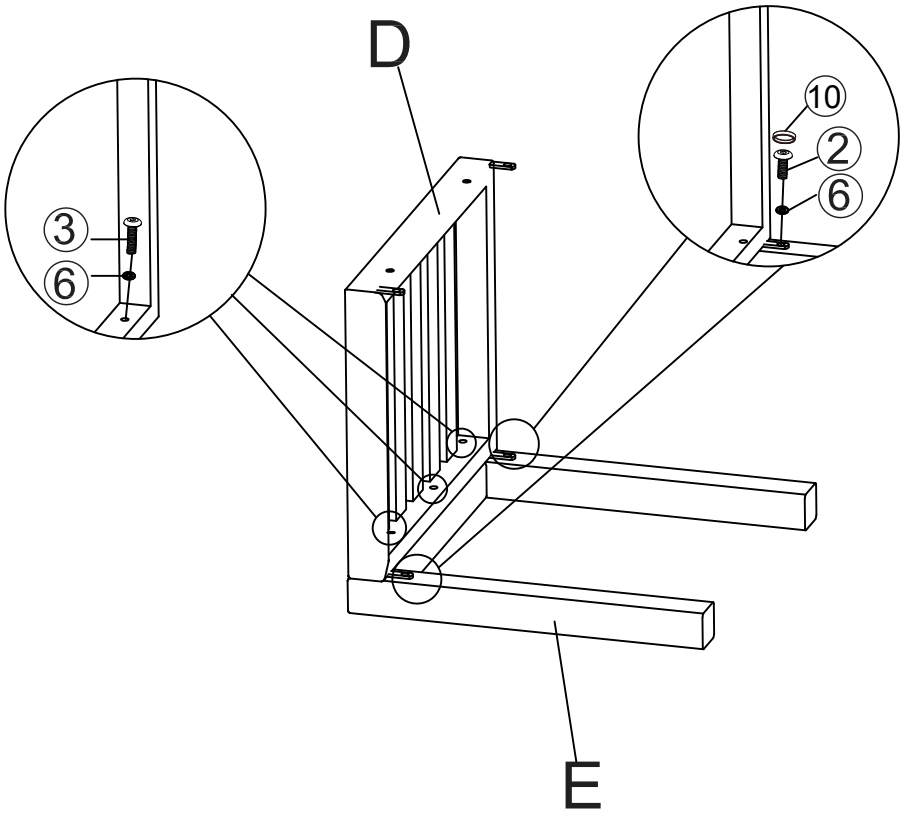
D
10
2
6
3
6
E

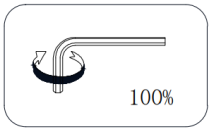
100%

3
6
10
2
6
E


0 1 2 3 4 5 6 7 8 9 10 11 12 13 14 15

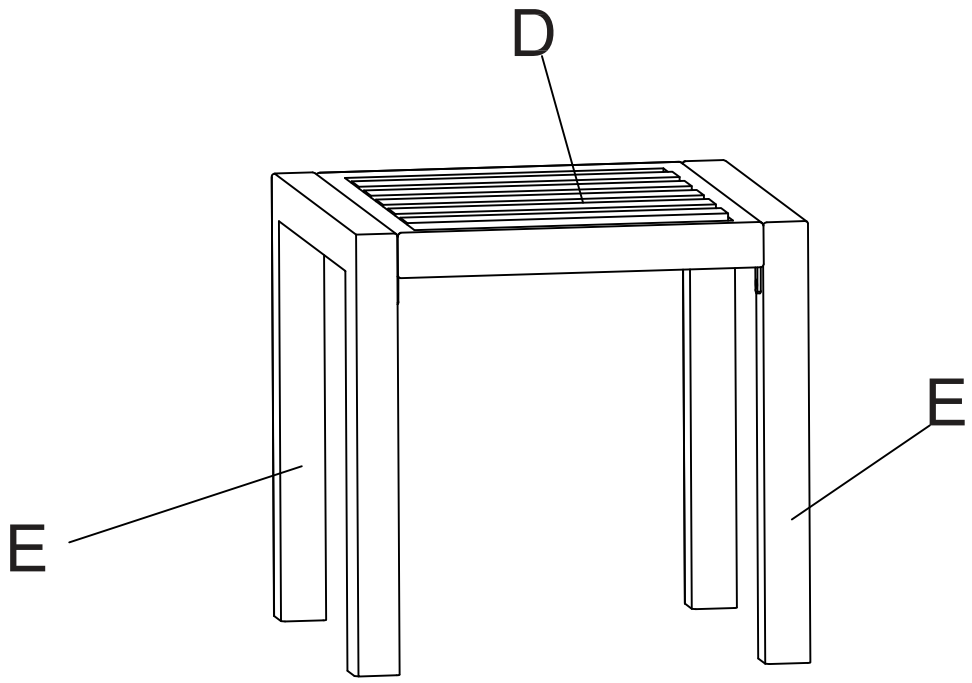
D
E
E

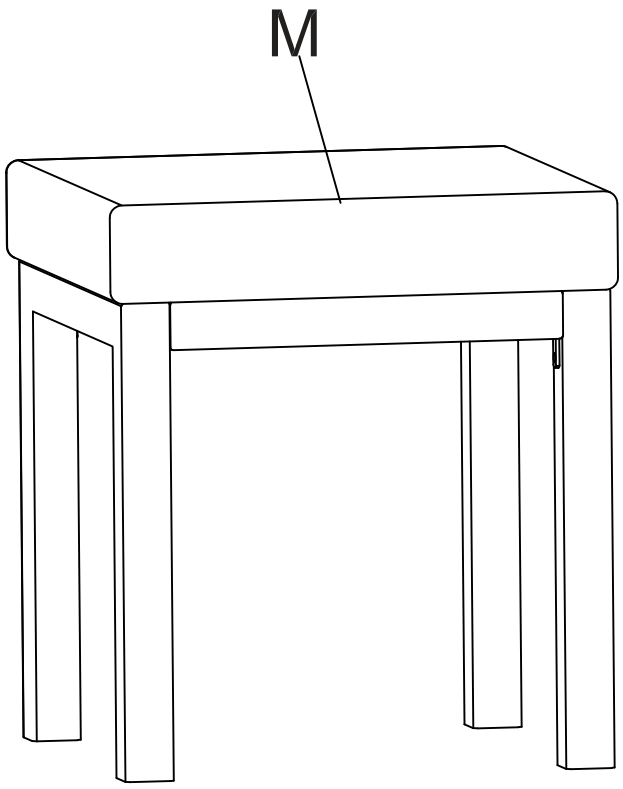
M


0 1 2 3 4 5 6 7 8 9 10 11 12 13 14 15

G		X2
J		X1
I		X3
K	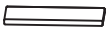	X1
L		X3
①	 M6*10	X6
②	 M6*15	X4
⑤	 M6*50	X6
⑥	 M6	X16
⑦		X1
⑩		x10

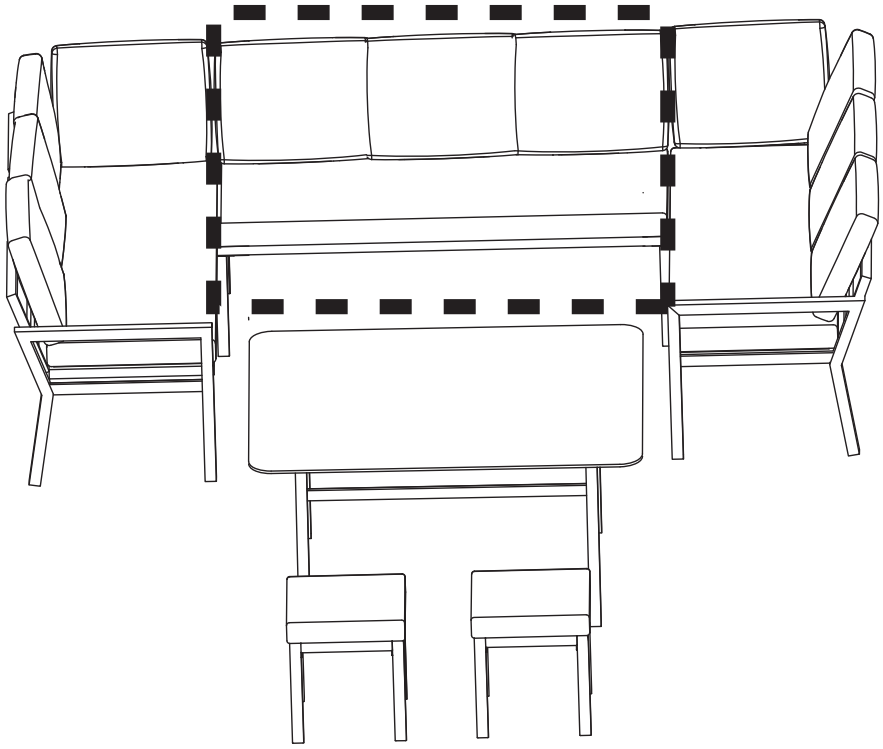



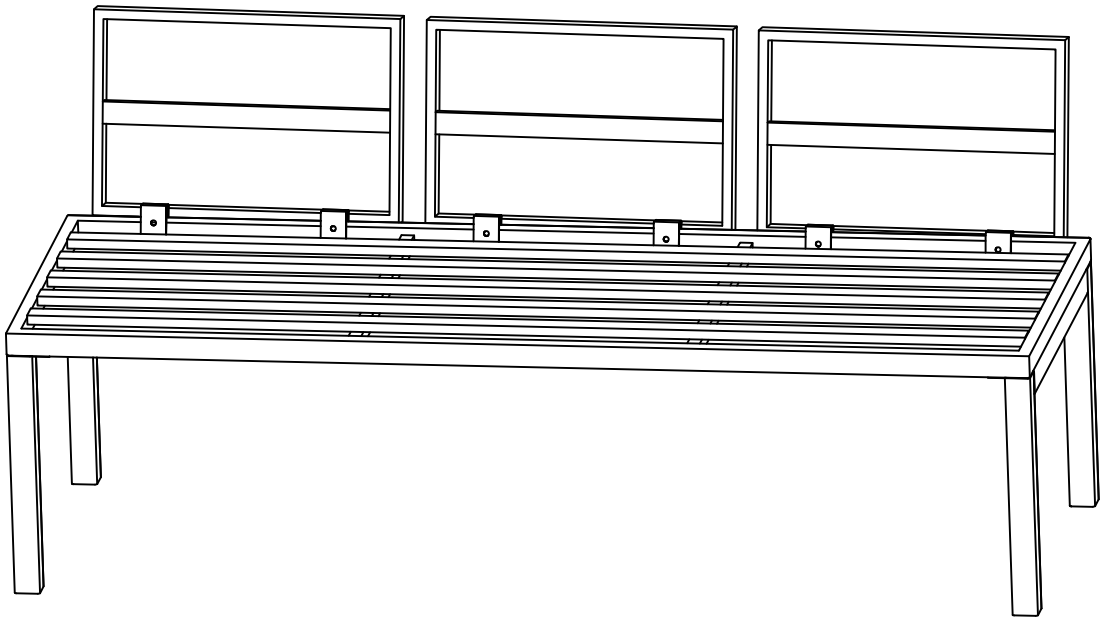

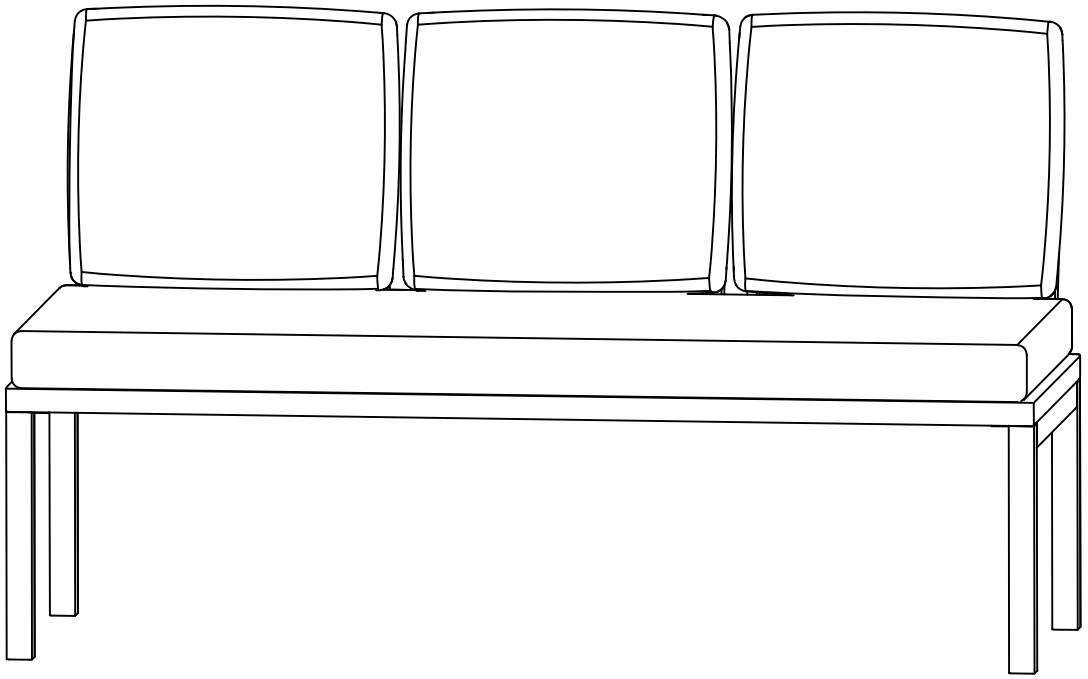


0 1 2 3 4 5 6 7 8 9 10 11 12 13 14 15

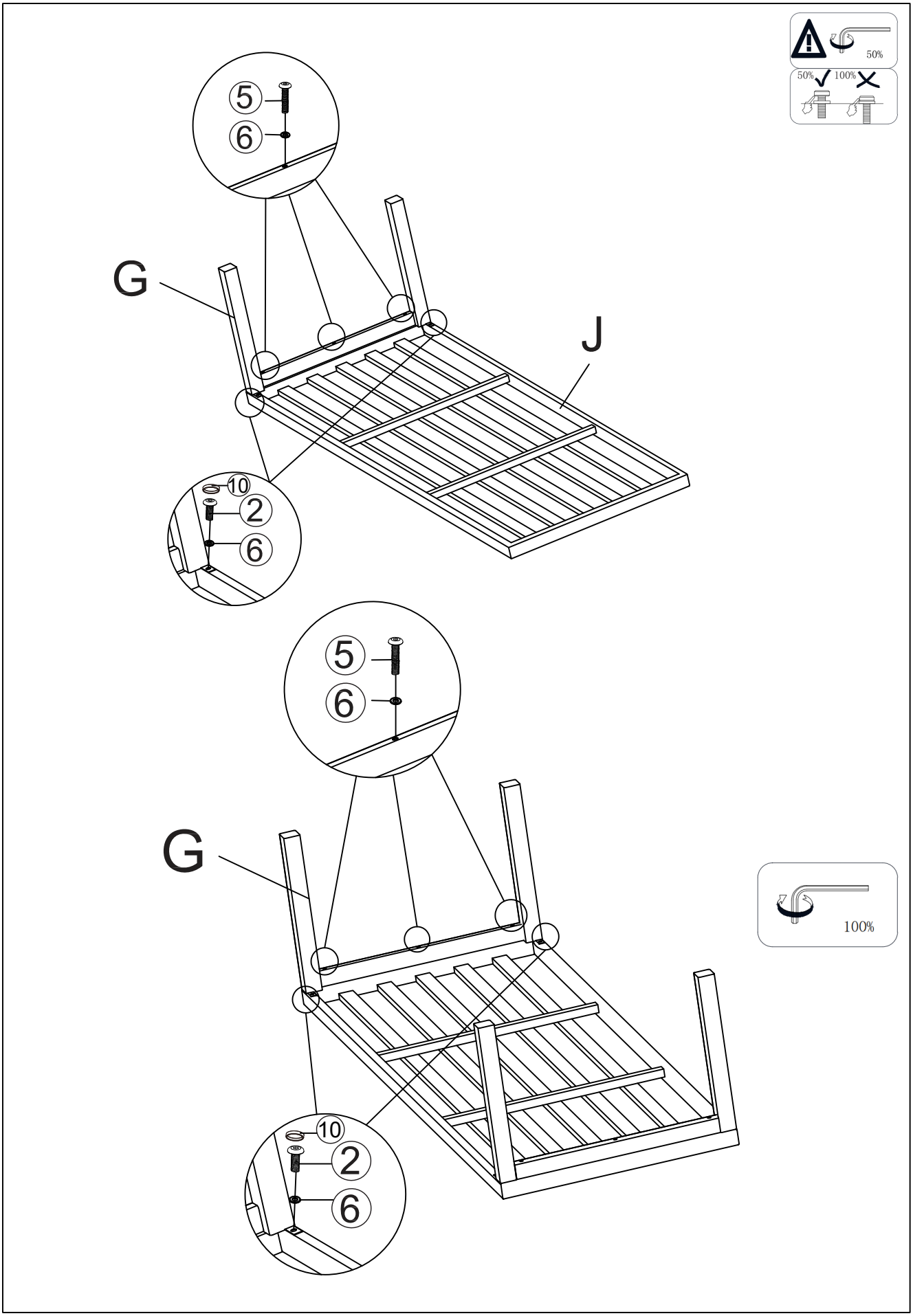
50%
50%
100%
5
6
G
J
10
2
6
5
6
G
100%
10
2
6


0 1 2 3 4 5 6 7 8 9 10 11 12 13 14 15

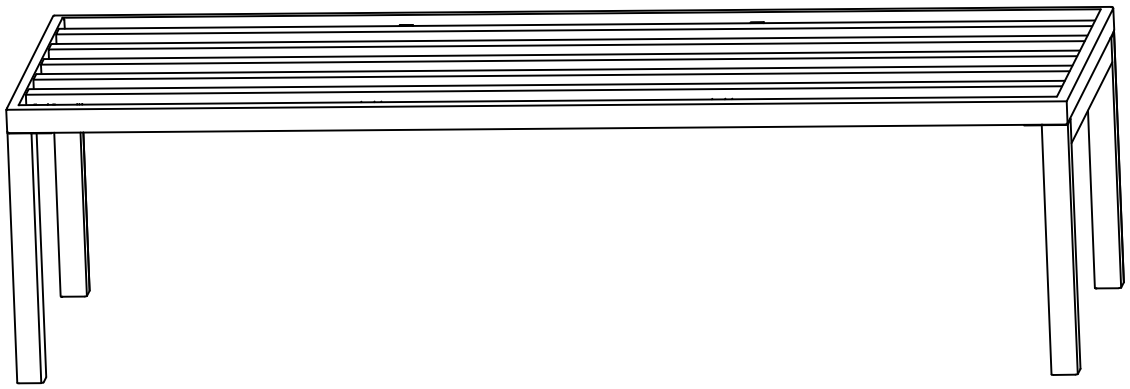

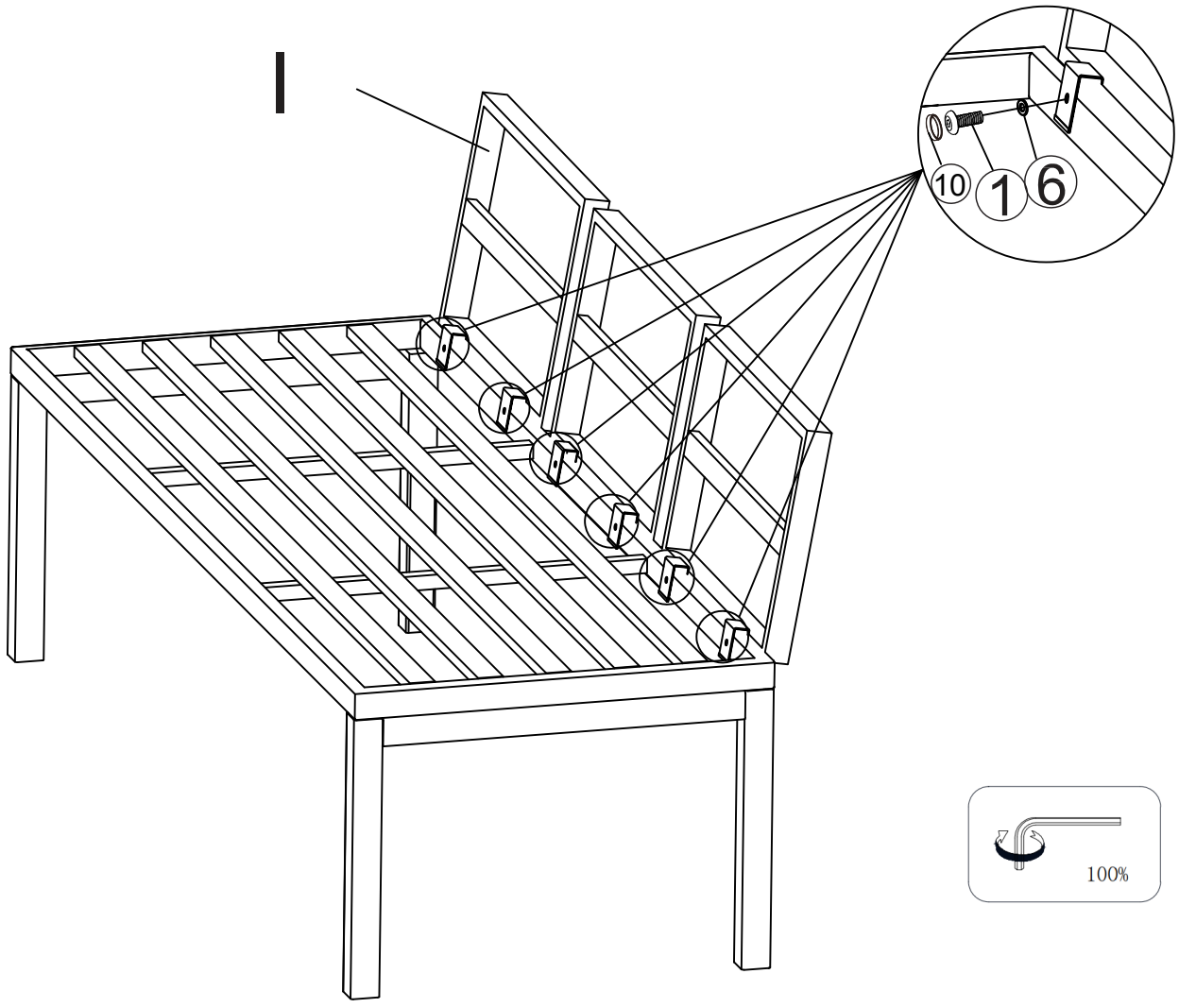
10
1
6
100%

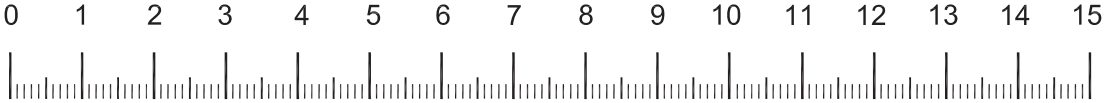
0 1 2 3 4 5 6 7 8 9 10 11 12 13 14 15

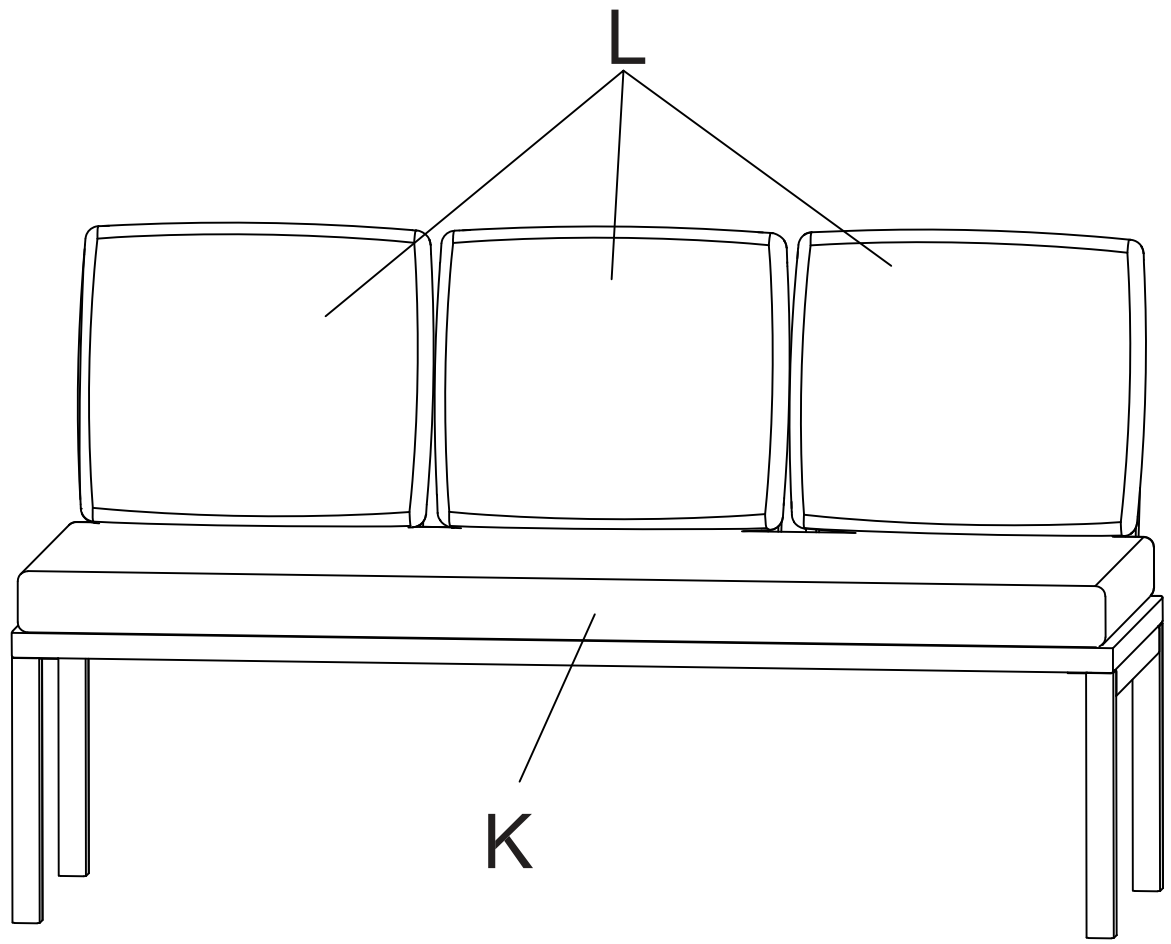
L
K


0 1 2 3 4 5 6 7 8 9 10 11 12 13 14 15

F		X1	⑨		X3
G		X1	Q		X 1
H		X1	⑩		x16
I		X4			
K		X1			
L		X 3			
N		X2			
①	 M6*10	X8			
②	 M6*15	X6			
④	 M6*35	X3			
⑤	 M6*50	X3			
⑥	 M6	X20			
⑧		X3			
⑦		x1			

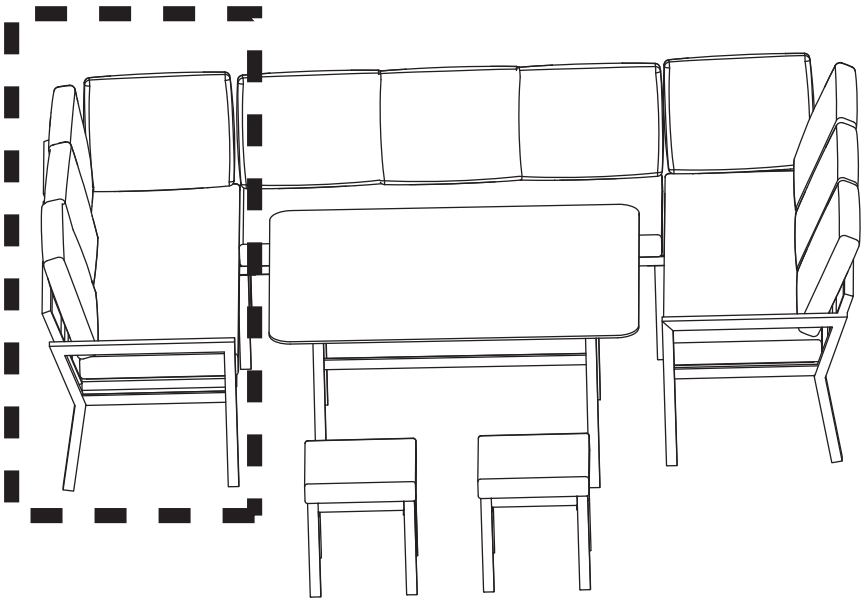

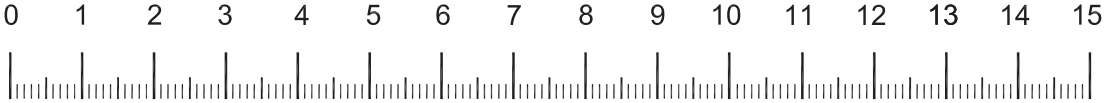

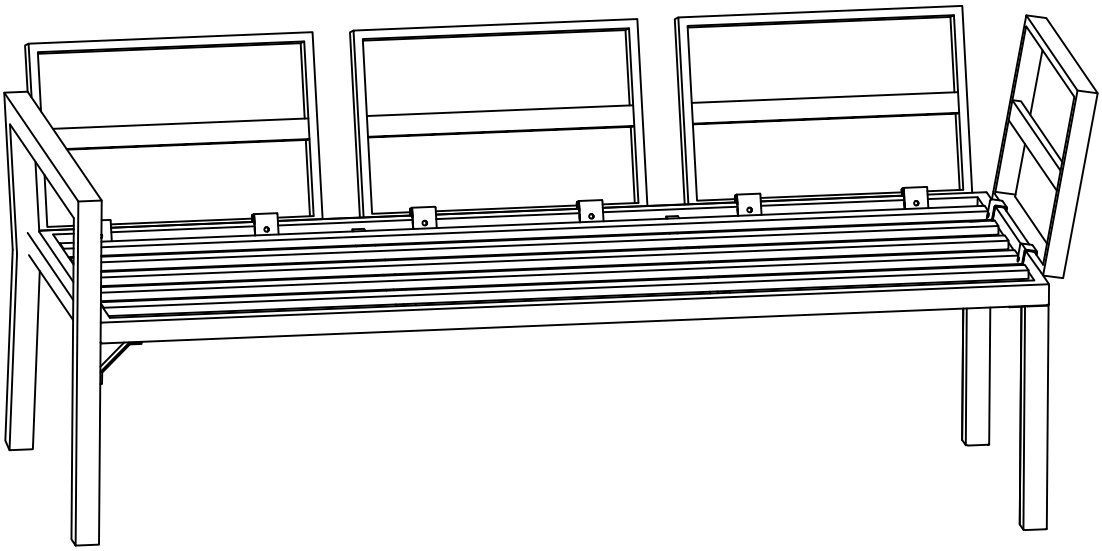

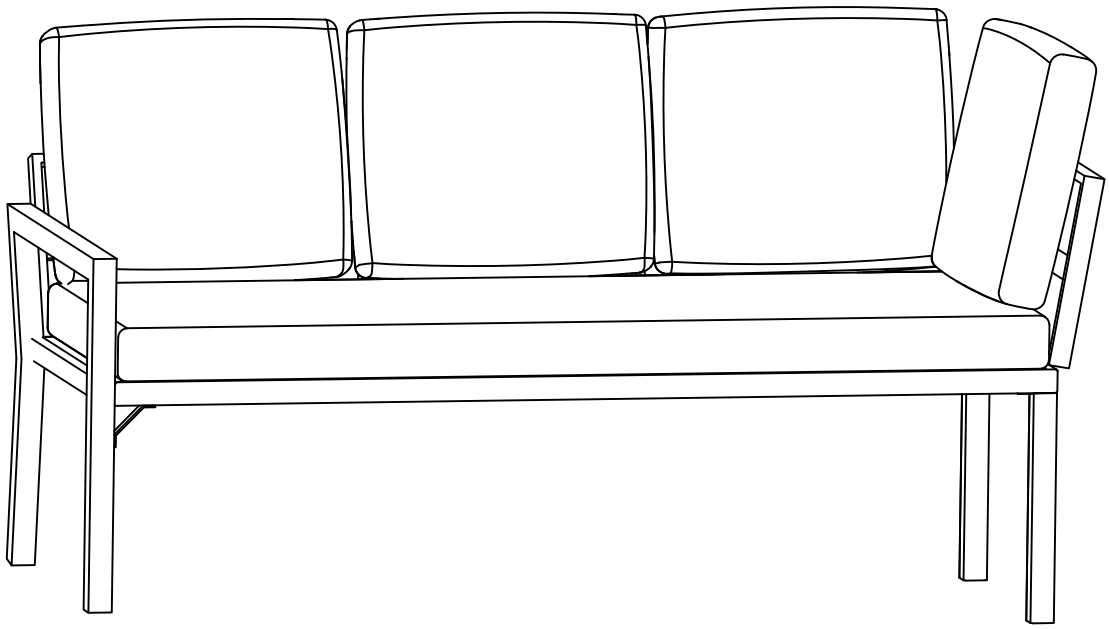


0 1 2 3 4 5 6 7 8 9 10 11 12 13 14 15

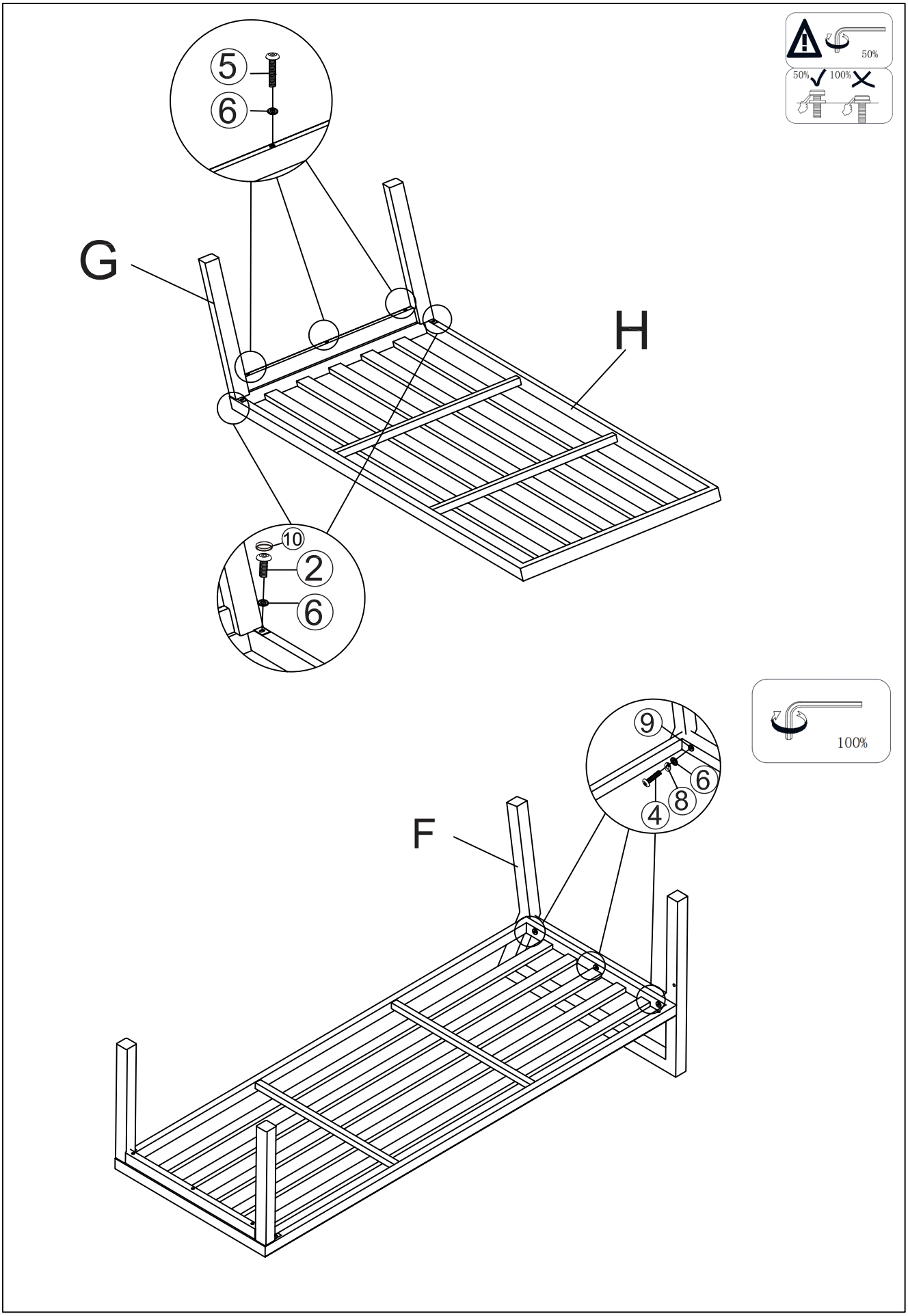

0 1 2 3 4 5 6 7 8 9 10 11 12 13 14 15

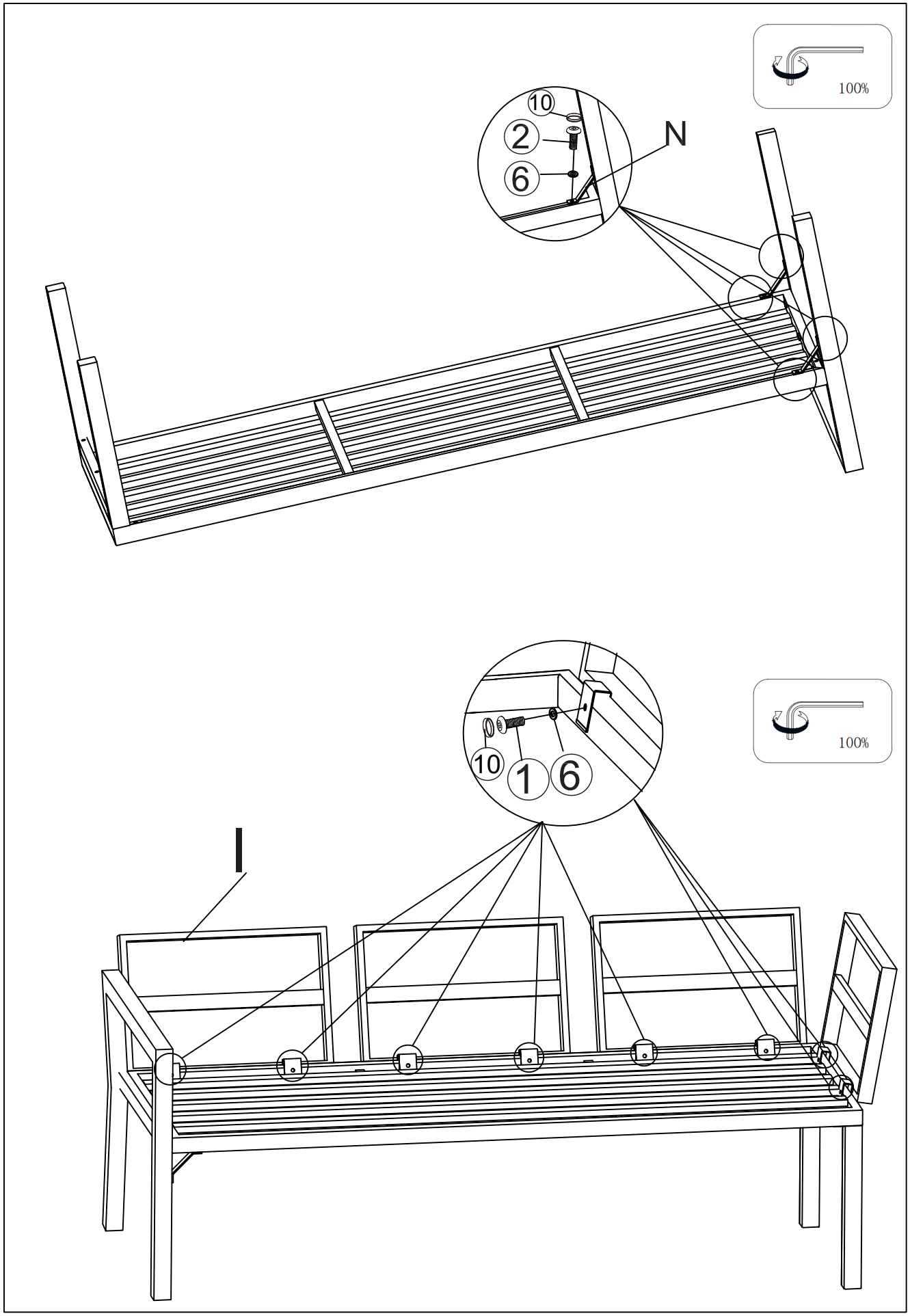

0 1 2 3 4 5 6 7 8 9 10 11 12 13 14 15

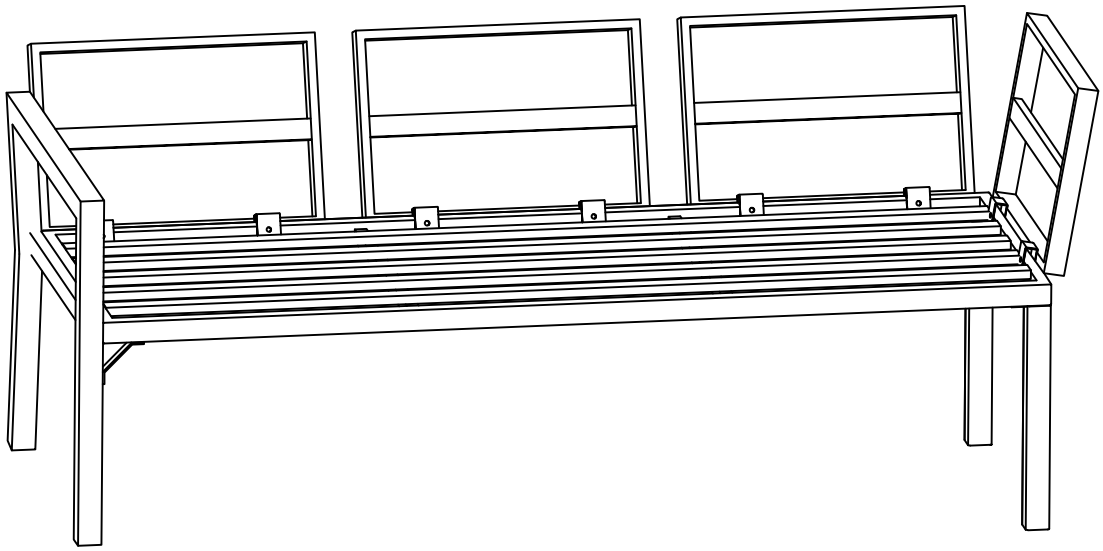

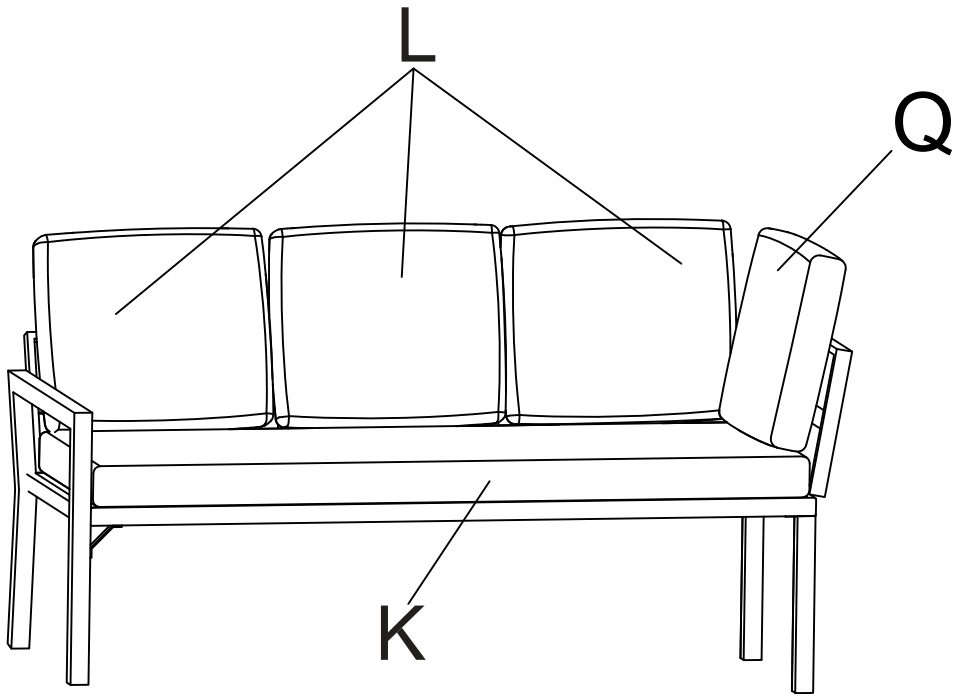
L
Q
K

P		X1	w		X4
G		X1	Q		X1
O	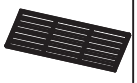	X1	⑨		X3
I		X4	⑩		x16
K		X1			
L		X3			
N		X2			
①	 M6*10	X8			
②	 M6*15	X6			
④	 M6*35	X3			
⑤	 M6*50	X3			
⑥	 M6	X20			
⑧		X3			
⑦		X1			

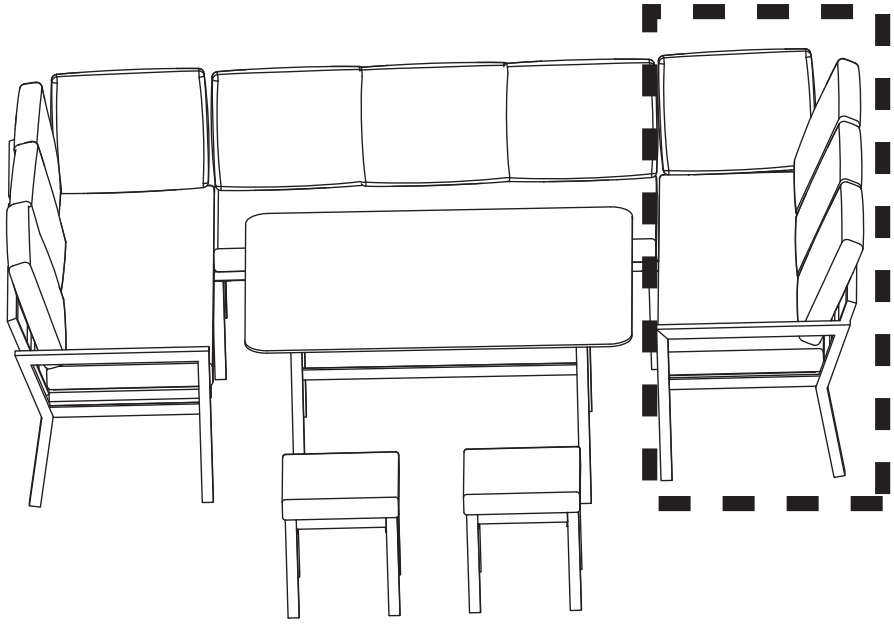

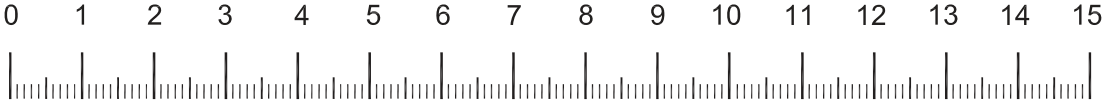

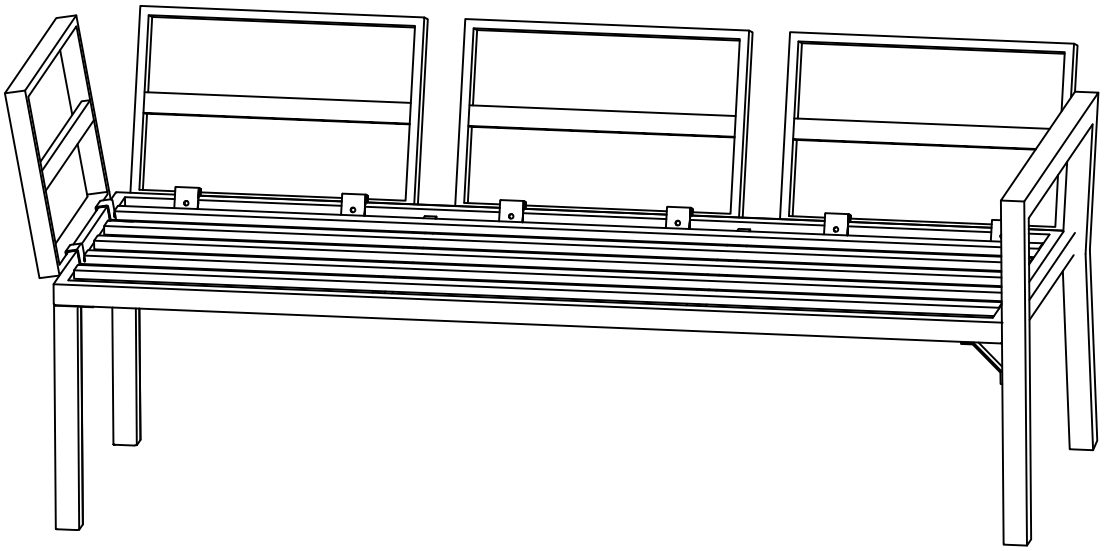

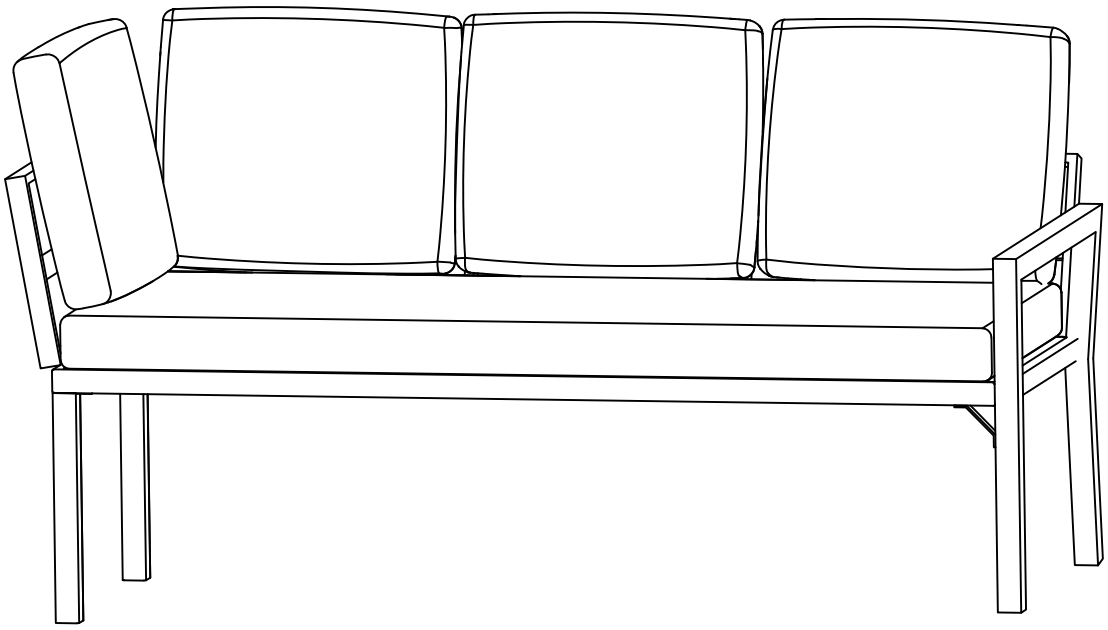

0 1 2 3 4 5 6 7 8 9 10 11 12 13 14 15

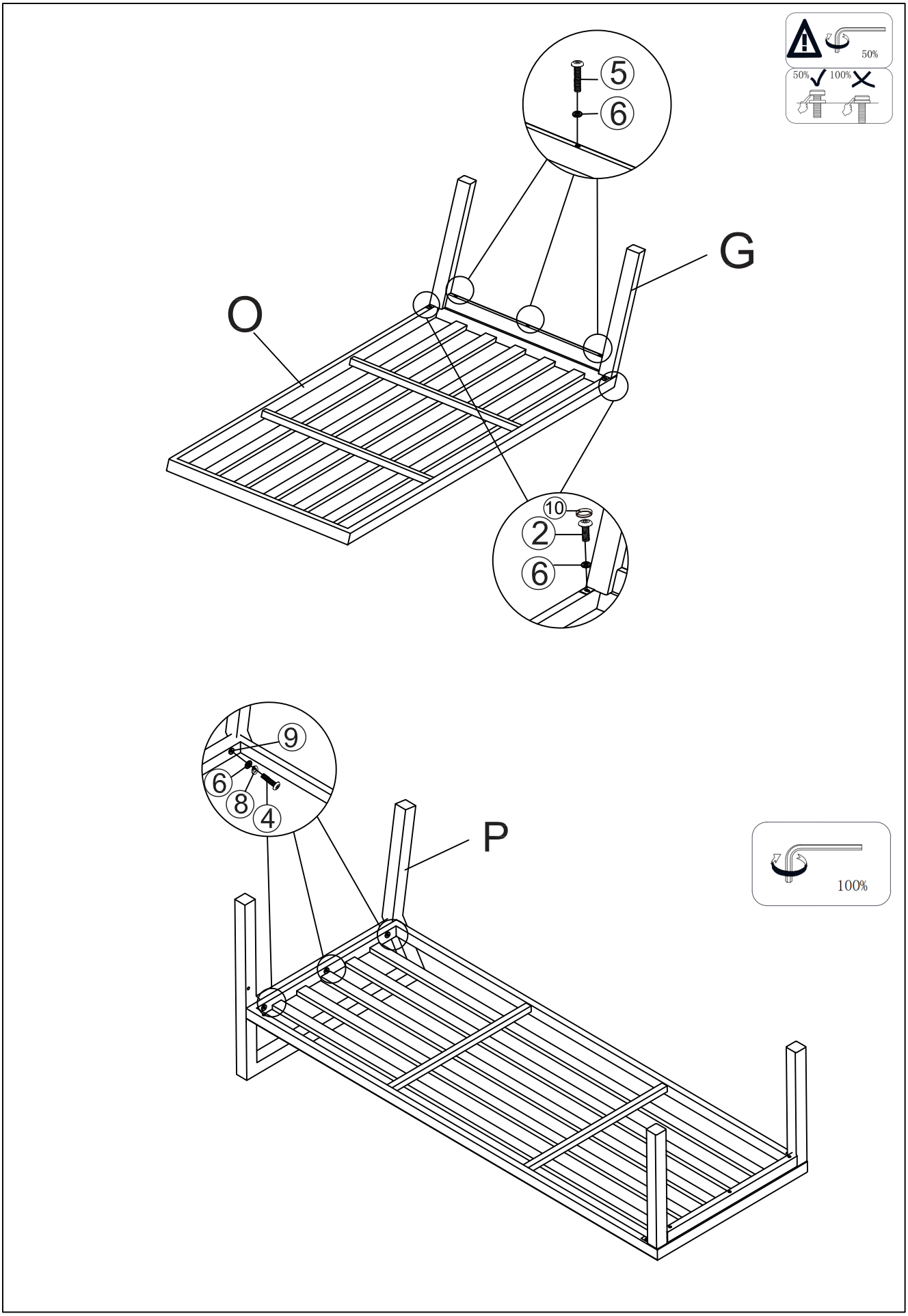

0 1 2 3 4 5 6 7 8 9 10 11 12 13 14 15

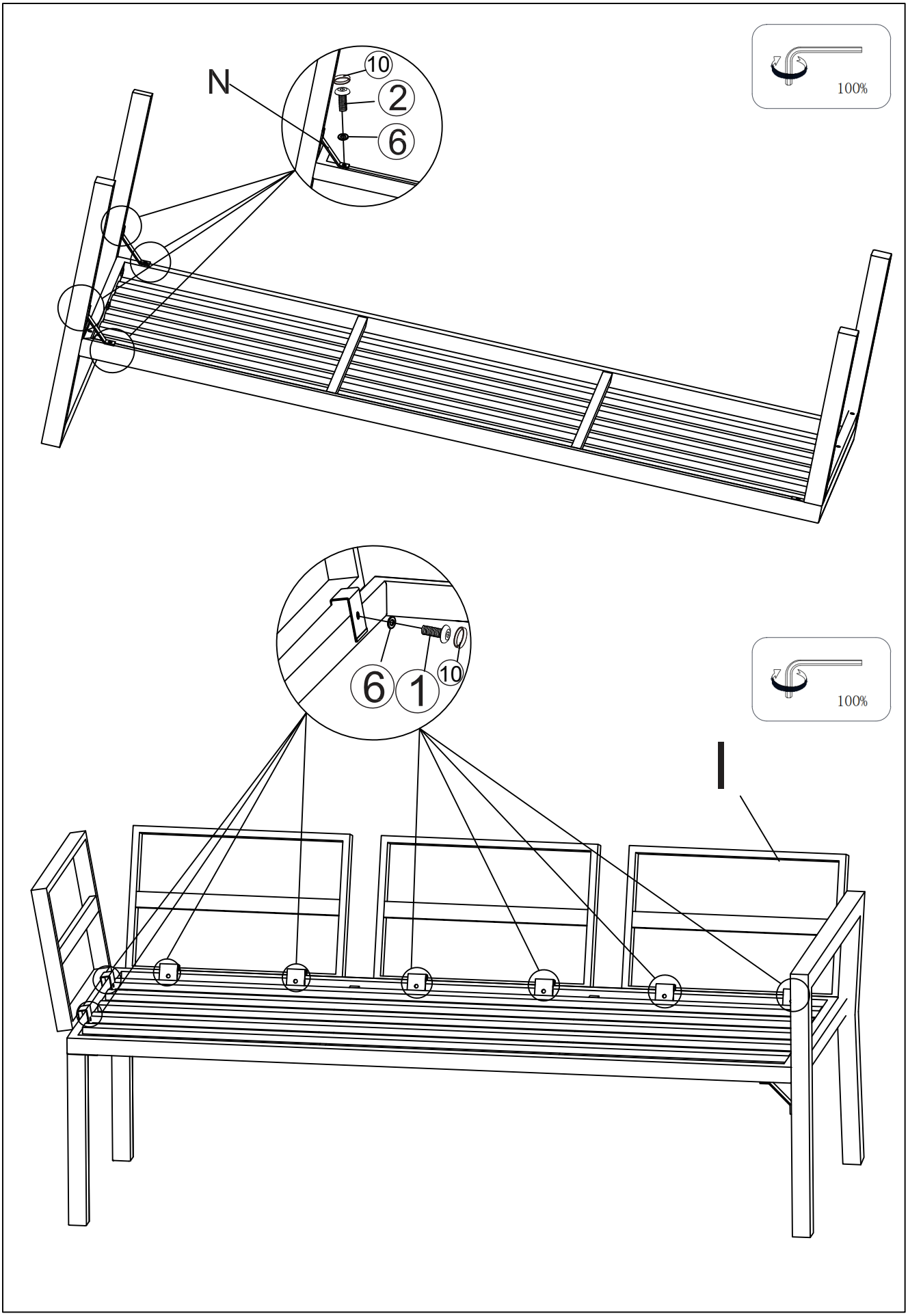

0 1 2 3 4 5 6 7 8 9 10 11 12 13 14 15

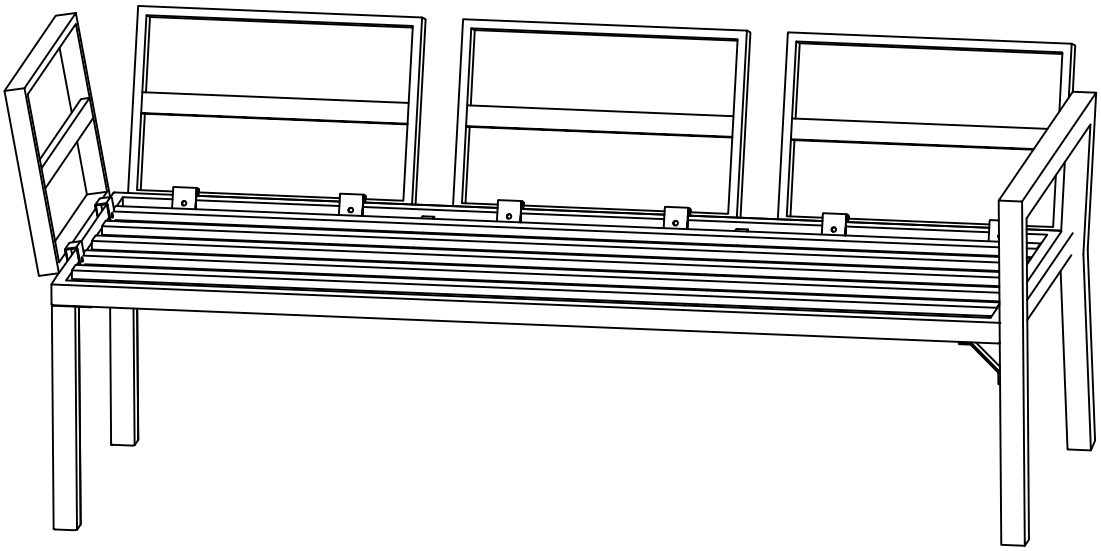

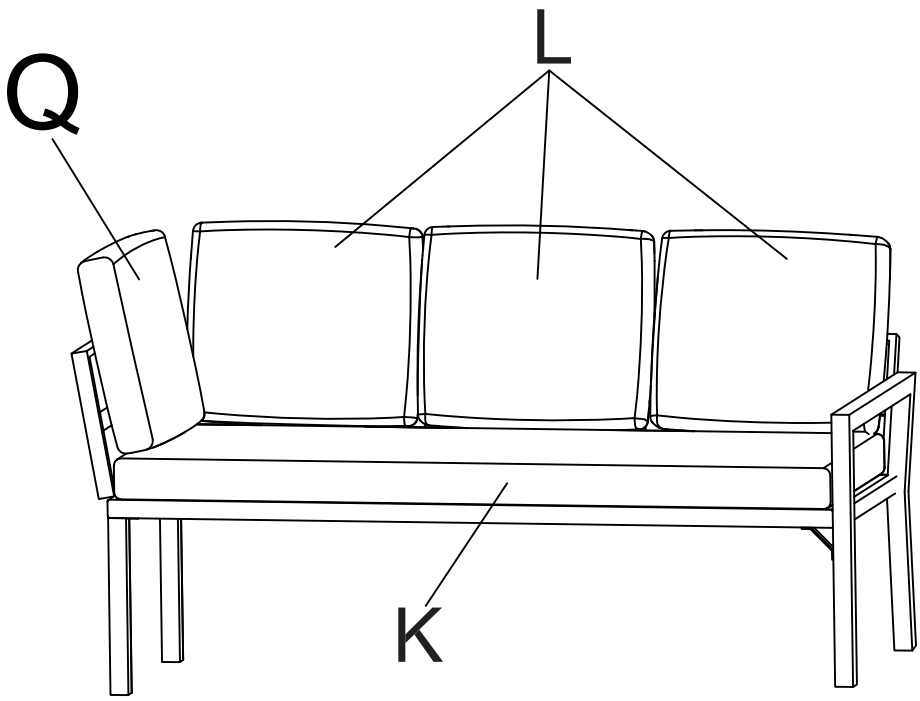
Q
L
K


0 1 2 3 4 5 6 7 8 9 10 11 12 13 14 15

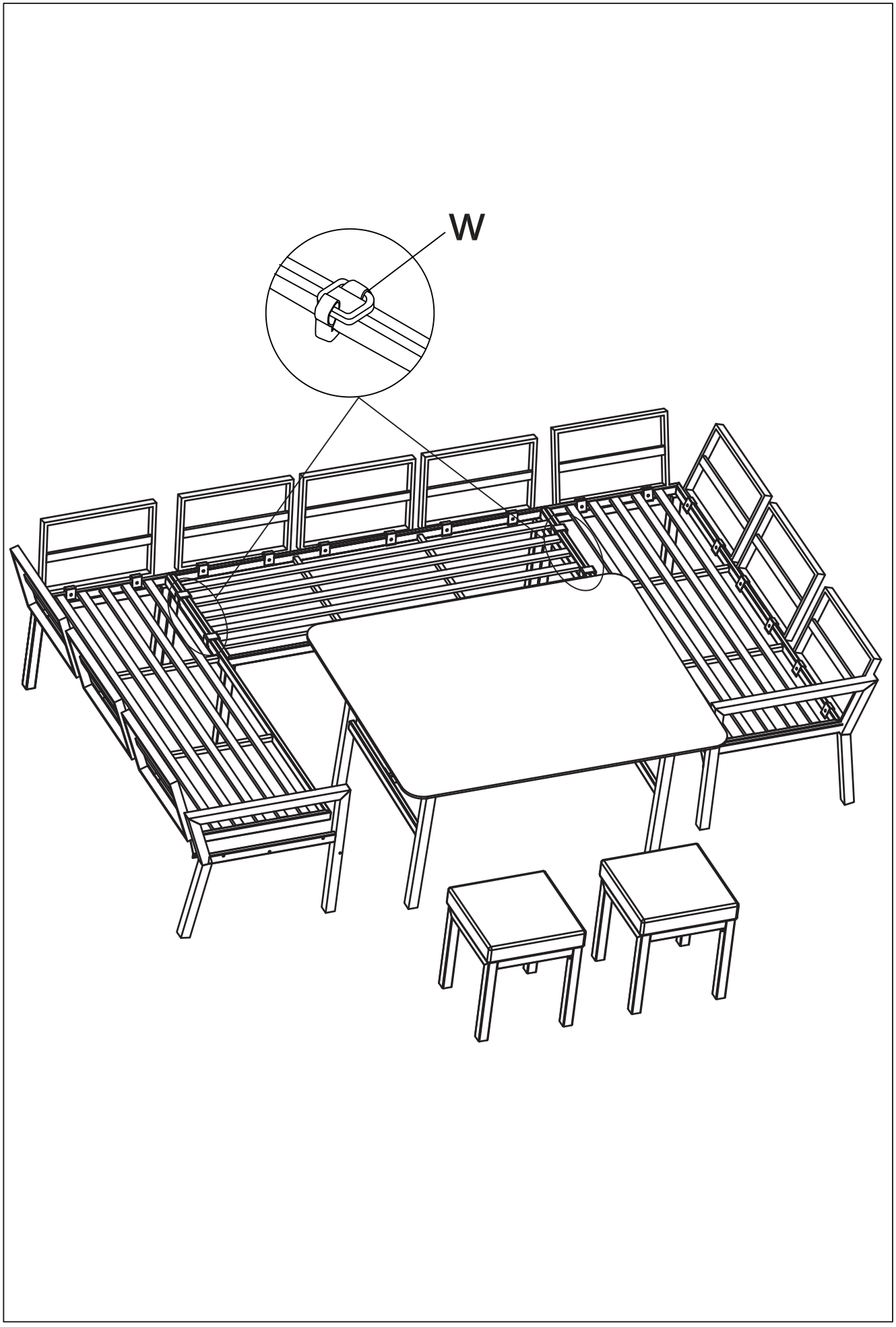
W


0 1 2 3 4 5 6 7 8 9 10 11 12 13 14 15

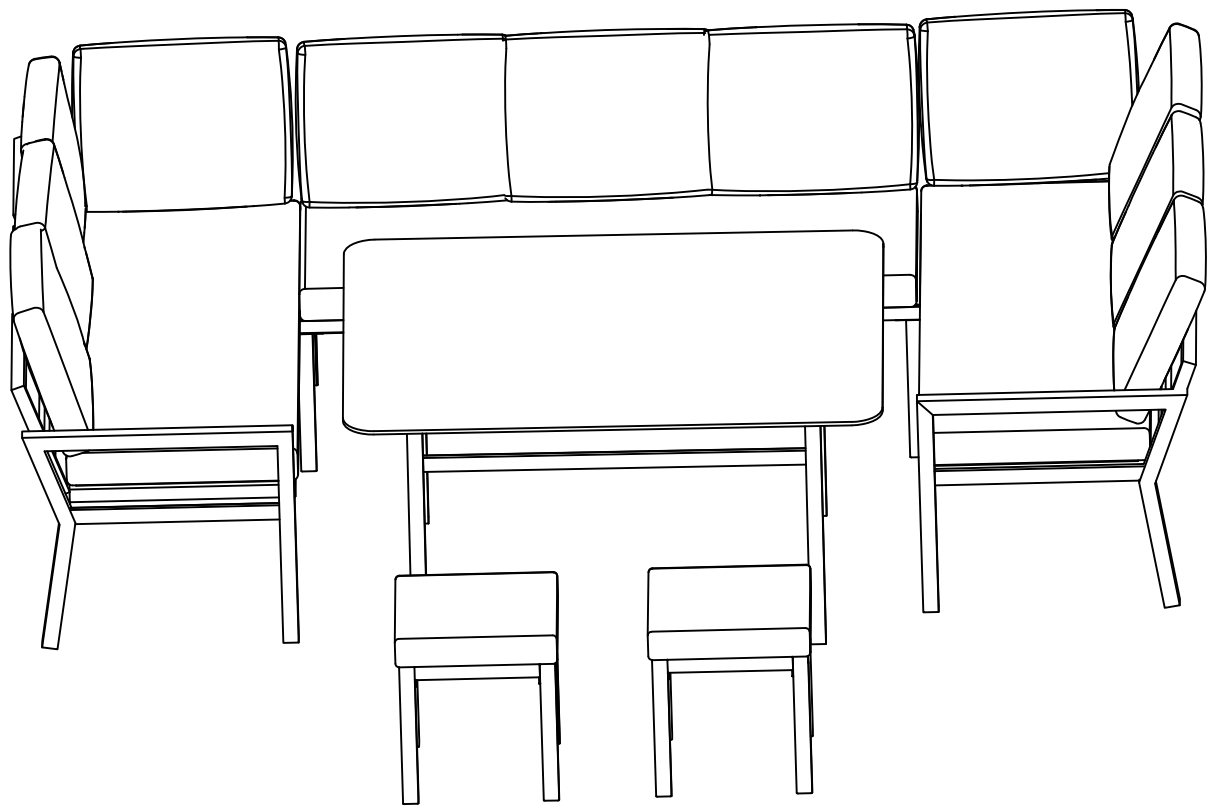

0 1 2 3 4 5 6 7 8 9 10 11 12 13 14 15