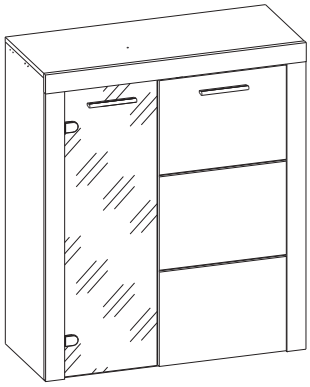

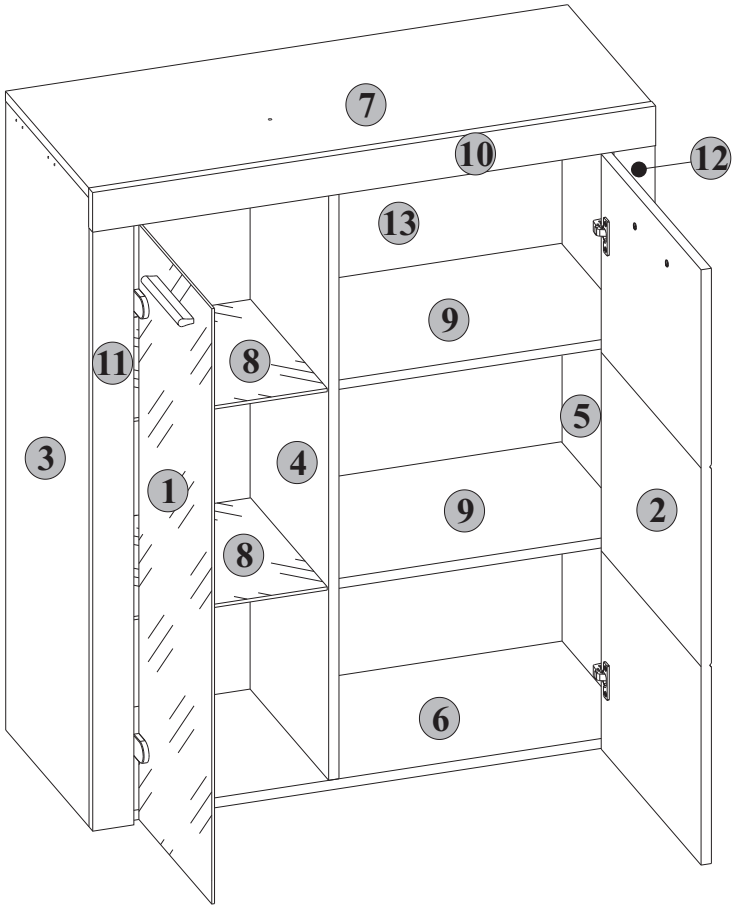


§1

| A | B | C | D |
|---|---|---|---|
| 1 | S300-001 | 900x292 | 1/6 |
| 2 | S300-002 | 900x400 | 1/6 |
| 3 | S300-104 | 951x335 | 1/6 |
| 4 | S300-105 | 936x315 | 1/6 |
| 5 | S300-106 | 951x335 | 1/6 |
| 6 | S300-203 | 789x315 | 1/6 |
| 7 | S300-207 | 820x335 | 1/6 |
| 8 | S300-301 | 333x307 | 1/6 |
| 9 | S300-303 | 439x312 | 1/6 |
| 10 | S300-504 | 821x60 | 1/6 |
| 11 | S300-505 | 906x60 | 1/6 |
| 12 | S300-517 | 906x60 | 1/6 |
| 13 | S300-902 | 956x803 | 1/6 |

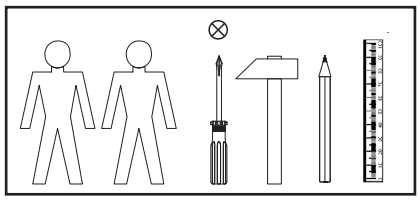

§14 2x o43/1

2x a11 | 2x b4 | 2x b57 | 2x ϕ3x9 mm p32 | 8x ϕ5 d1 | 8x ϕ5x17 mm d3 | 4x ϕ6.3x13 mm e2 | 4x ϕ6x13 mm e3 | 16x ϕ8x30 mm f1

2x a118 | 2x a66/9 | 2x a66/8 | 10x l1 | 6x l2 | 2x ϕ6,5x9 mm o1 | 2x ϕ4x12 mm p59 | 2x ϕ4x30 mm p9 | 2x 128 mm c289

21x ϕ15x12mm #16 r1 | 21x r42 | 17x ø16 s2

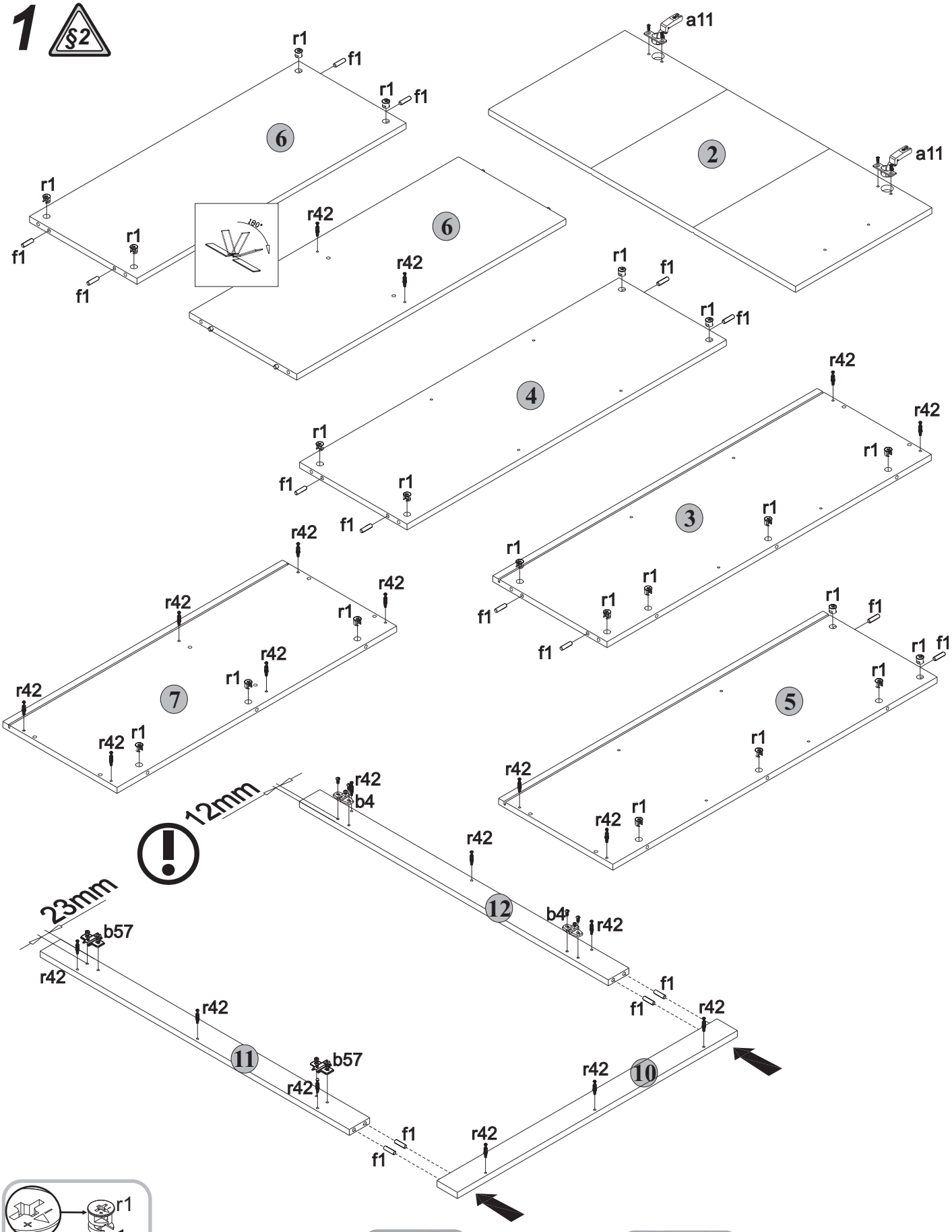
1
§2
r1
f1
6
a11
2
r42
180°
4
3
7
5
12mm
b4
12
23mm
b57
11
10

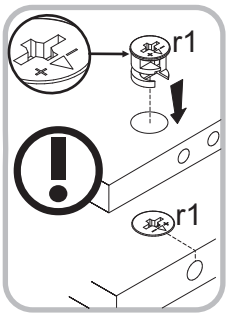
r1
r1

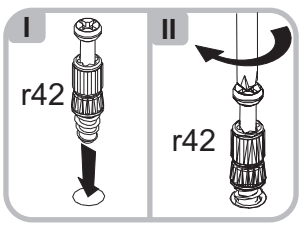
I
II
r42
r42

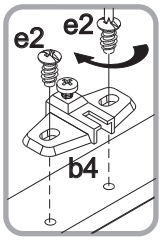
e2
e2
b4

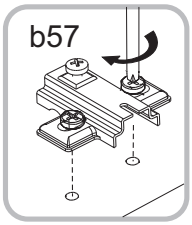
b57

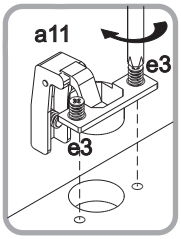
a11
e3
e3

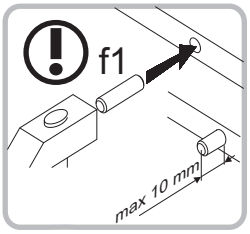
f1
max 10 mm

## 2 §6

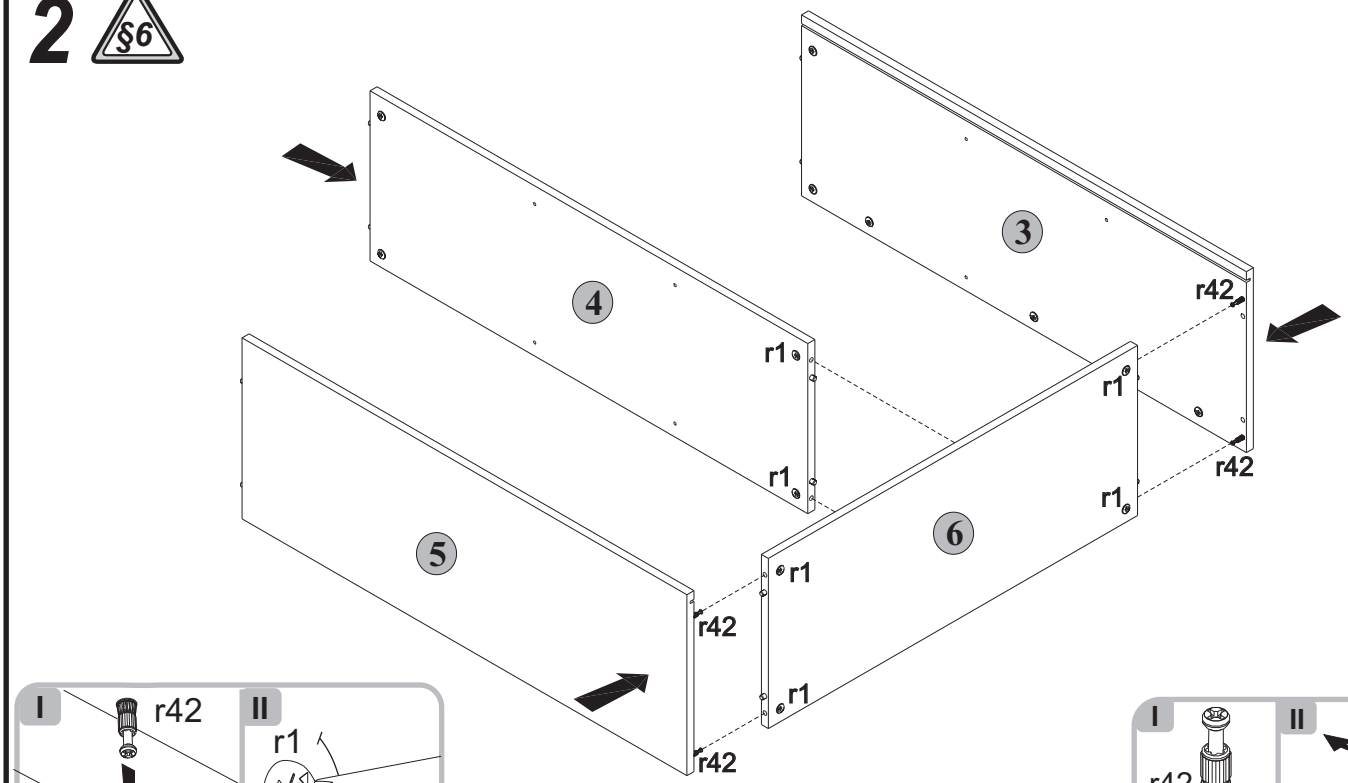
3
4
5
6
r1
r42

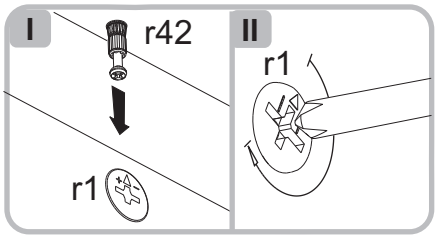
I
r42
r1
II
r1

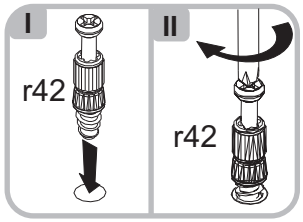
I
r42
II
r42

## 3

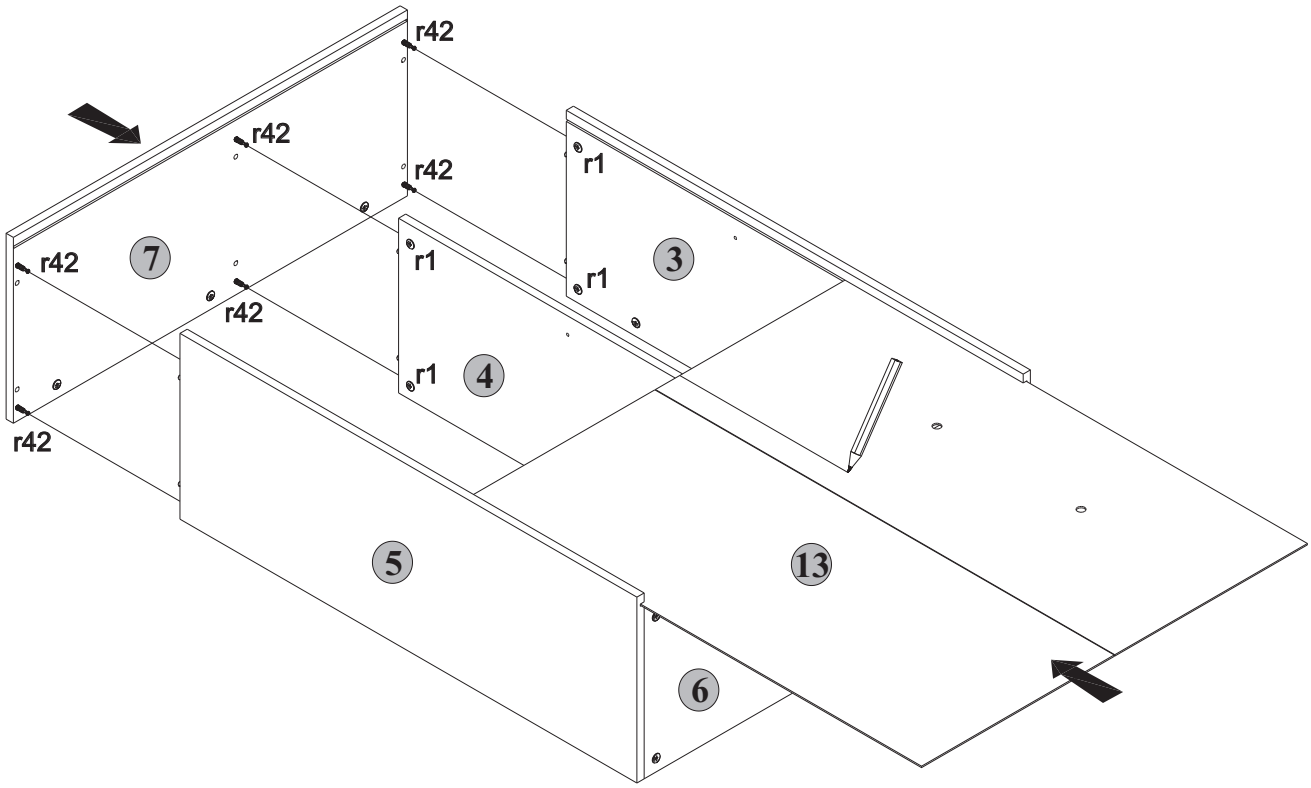
r42
r1
3
4
5
6
7
13

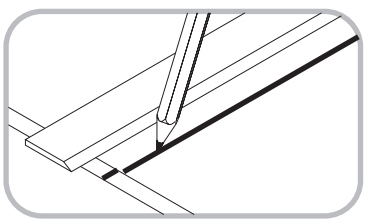

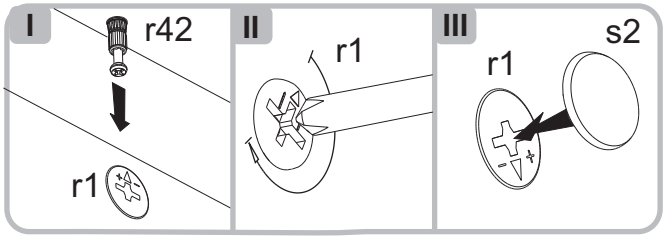
I
r42
r1
II
r1
III
s2
r1

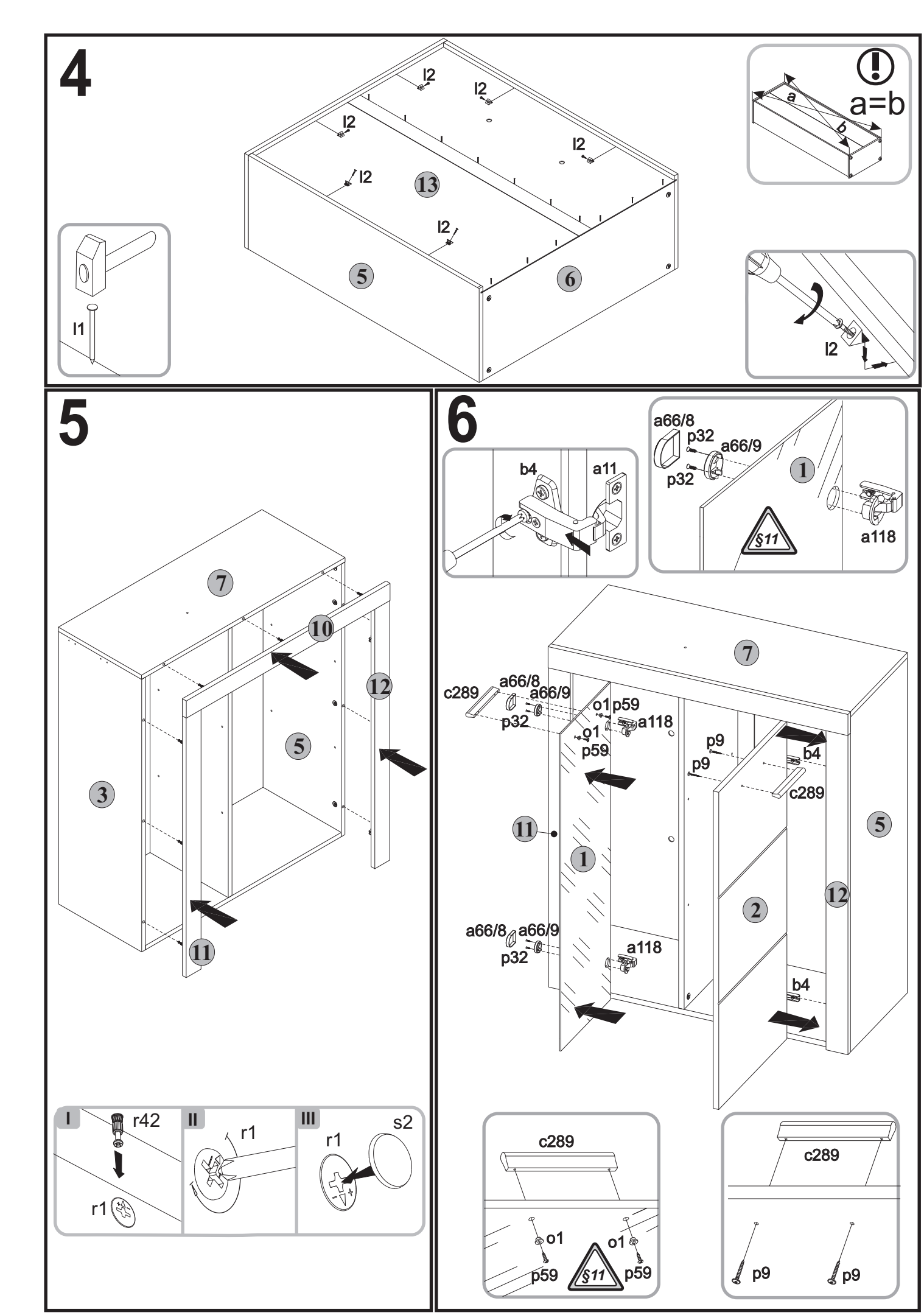
4
l2
l2
l2
l2
l2
l2
13
5
6
a=b
a
b
l1
l2
5
7
10
12
3
5
11
I
r42
r1
II
r1
III
r1
s2
6
b4
a11
a66/8
p32
a66/9
p32
1
§11
a118
7
c289
a66/8
a66/9
p32
o1
p59
a118
o1
p59
p9
p9
b4
c289
11
1
5
12
2
a66/8
a66/9
p32
a118
b4
c289
o1
o1
p59
§11
p59
c289
p9
p9

# 7

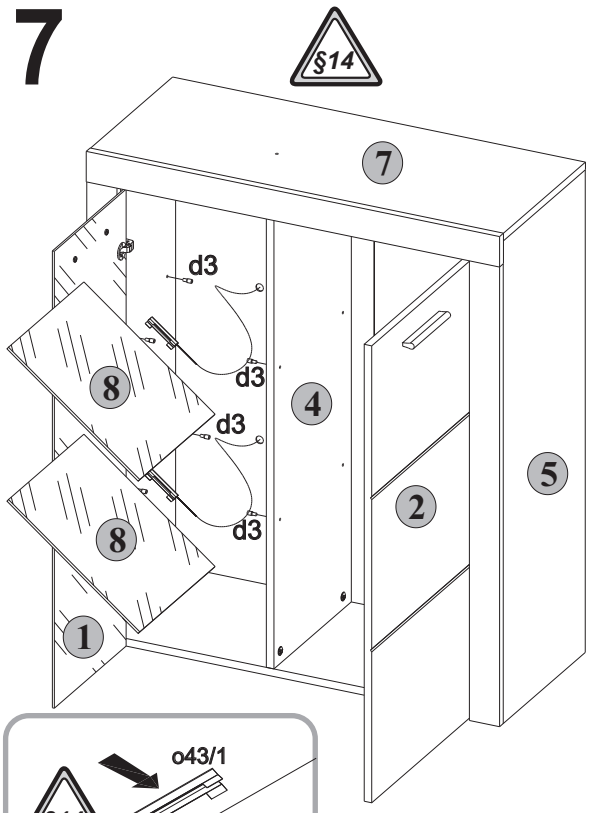
§14
7
d3
d3
d3
d3
8
8
4
2
5
1

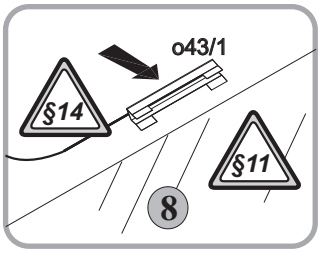
o43/1
§14
§11
8

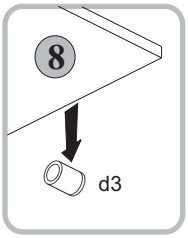
8
d3

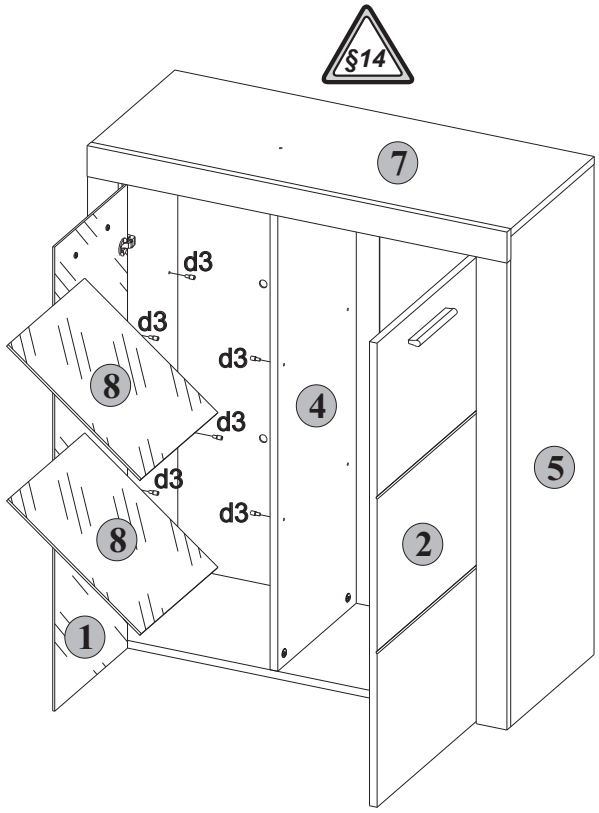
§14
7
d3
d3
d3
d3
d3
d3
8
8
4
2
5
1

# 8

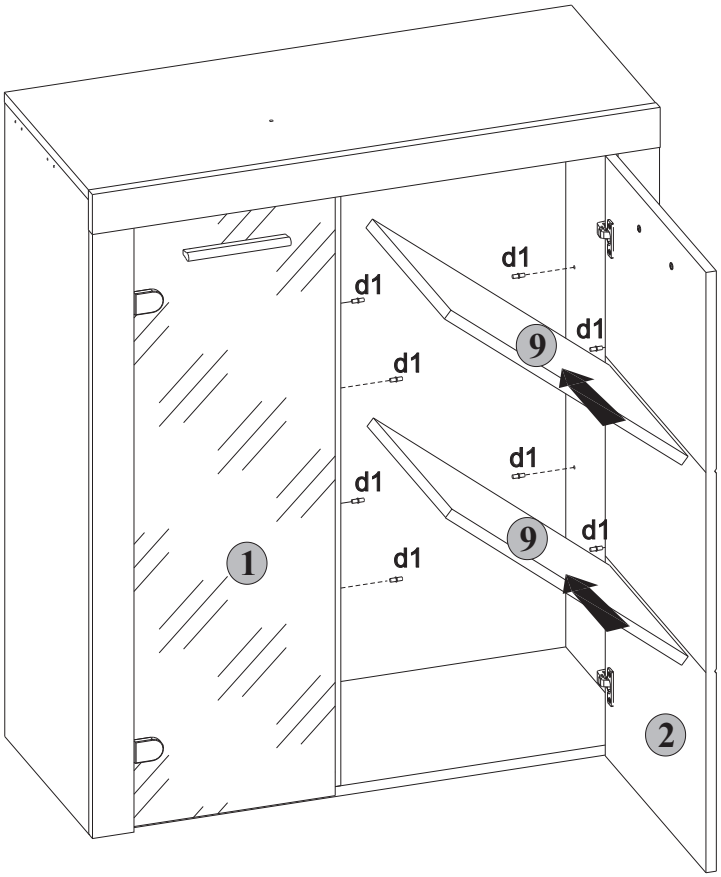
d1
d1
d1
d1
d1
d1
9
9
1
2

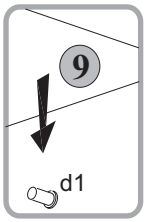
9
d1

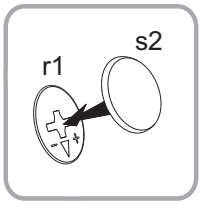
r1
s2

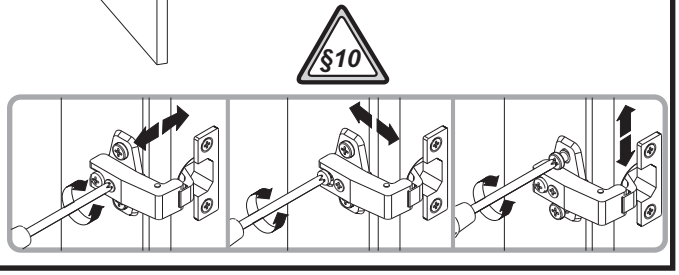
§10

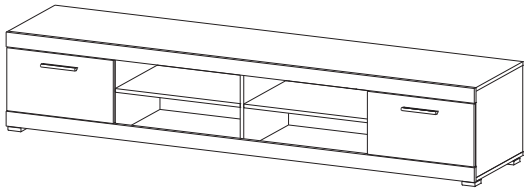

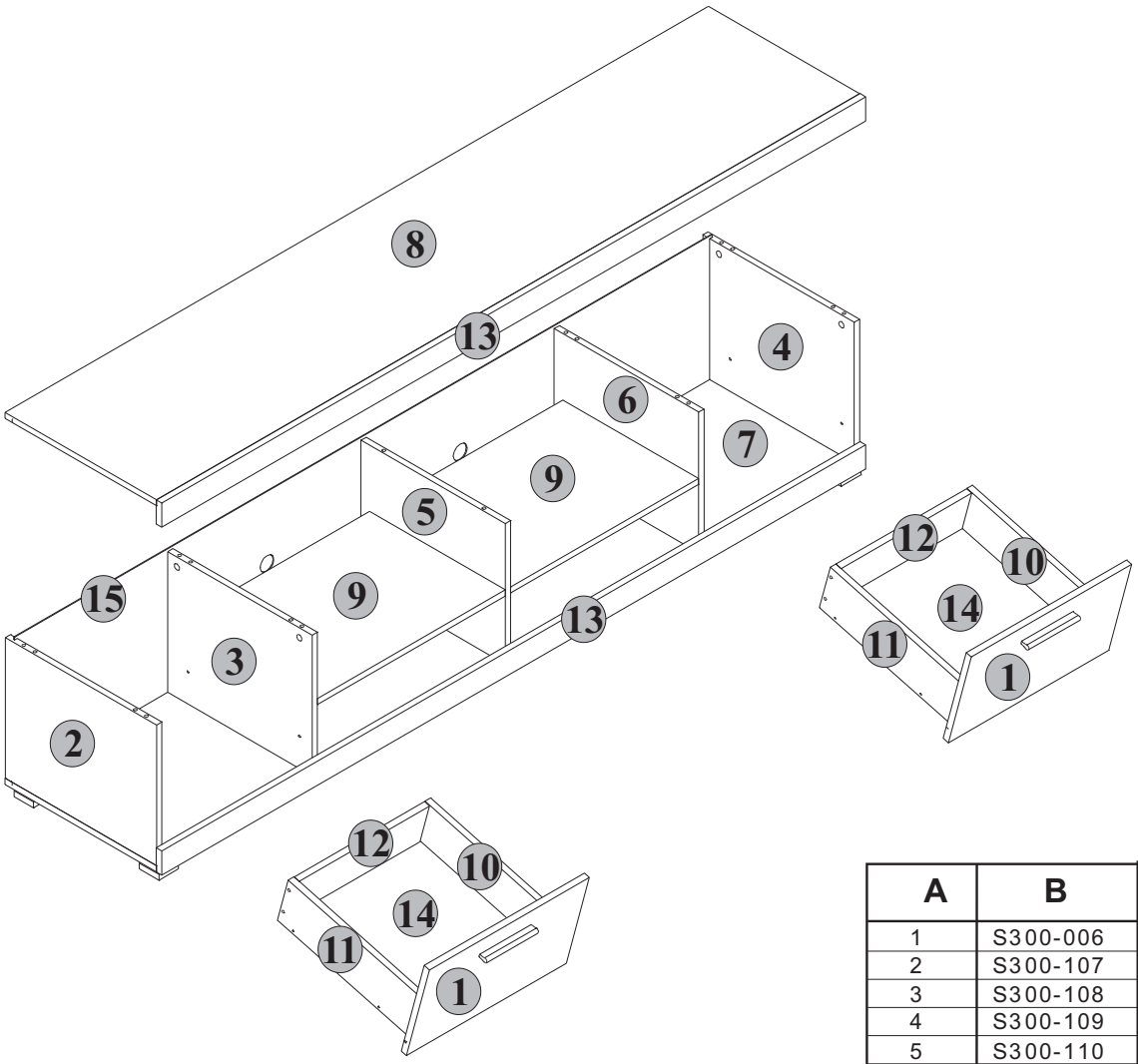


§1

| A | B | C | D |
|---|---|---|---|
| 1 | S300-006 | 460x255 | 1/2 |
| 2 | S300-107 | 350x435 | 1/2 |
| 3 | S300-108 | 350x415 | 1/2 |
| 4 | S300-109 | 350x435 | 1/2 |
| 5 | S300-110 | 350x415 | 1/2 |
| 6 | S300-111 | 350x415 | 1/2 |
| 7 | S300-205 | 2020x435 | 2/2 |
| 8 | S300-206 | 2020x435 | 2/2 |
| 9 | S300-305 | 540x390 | 1/2 |
| 10 | MZ1-537 | 400x120 | 1/2 |
| 11 | MZ1-538 | 400x120 | 1/2 |
| 12 | S300-506A | 375x120 | 1/2 |
| 13 | S300-507 | 2021x60 | 2/2 |
| 14 | S300-903A | 395x386 | 1/2 |
| 15 | S300-904 | 2003x365 | 2/2 |

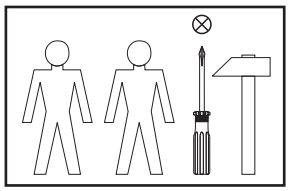

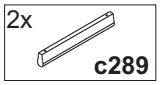


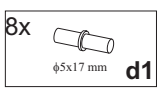


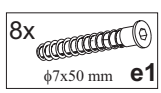


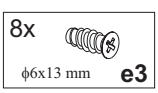


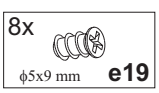


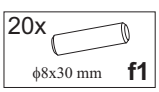


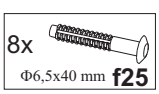


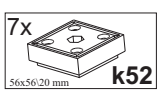


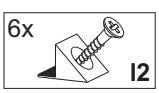


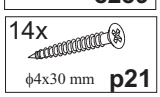


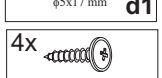

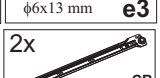


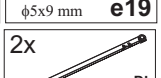

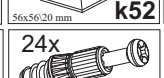

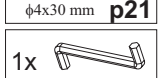

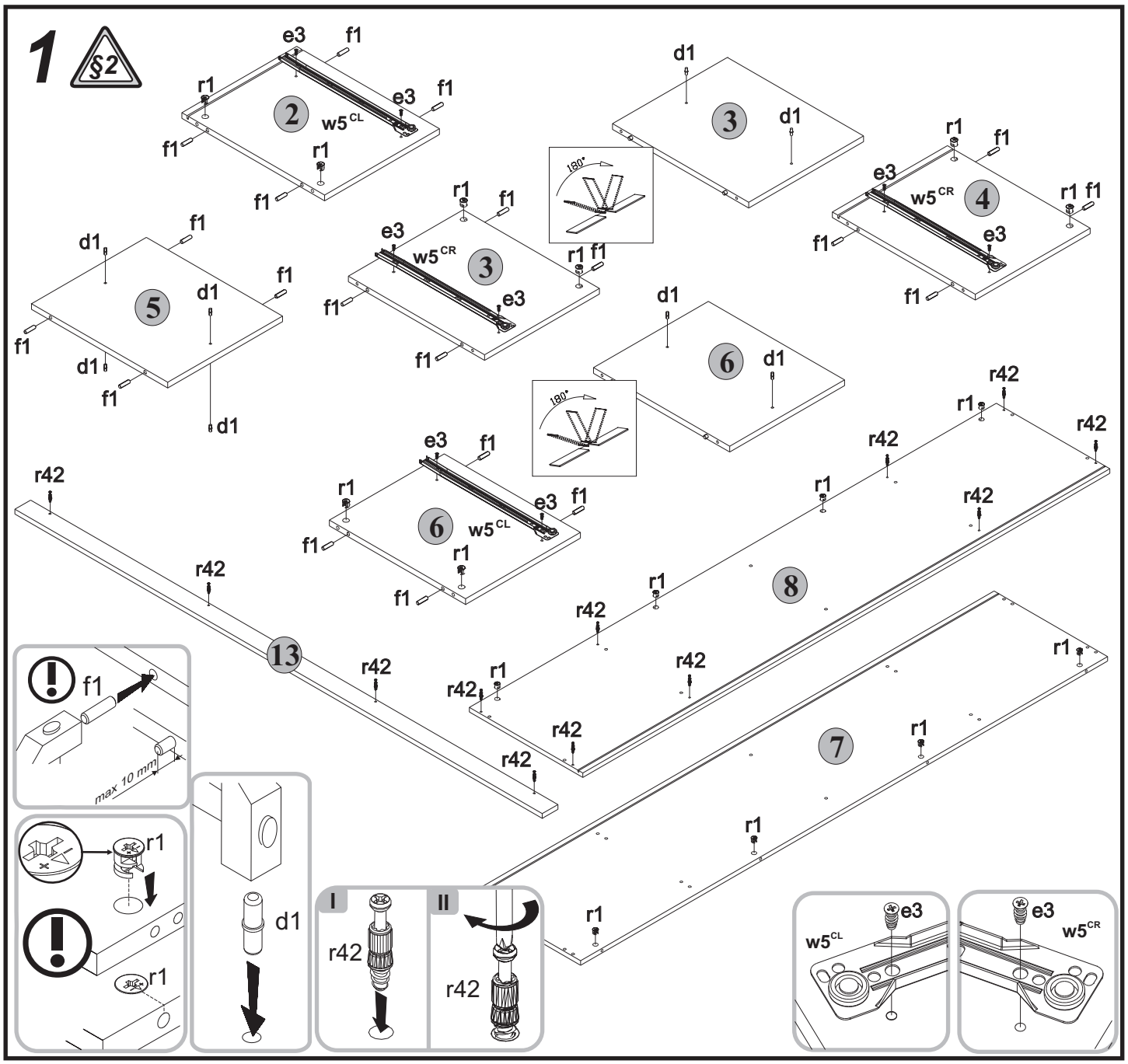
1
§2
e3
f1
r1
2
w5 CL
d1
3
180°
w5 CR
4
5
6
r42
8
13
7
max 10 mm
I
II
w5CL
w5CR

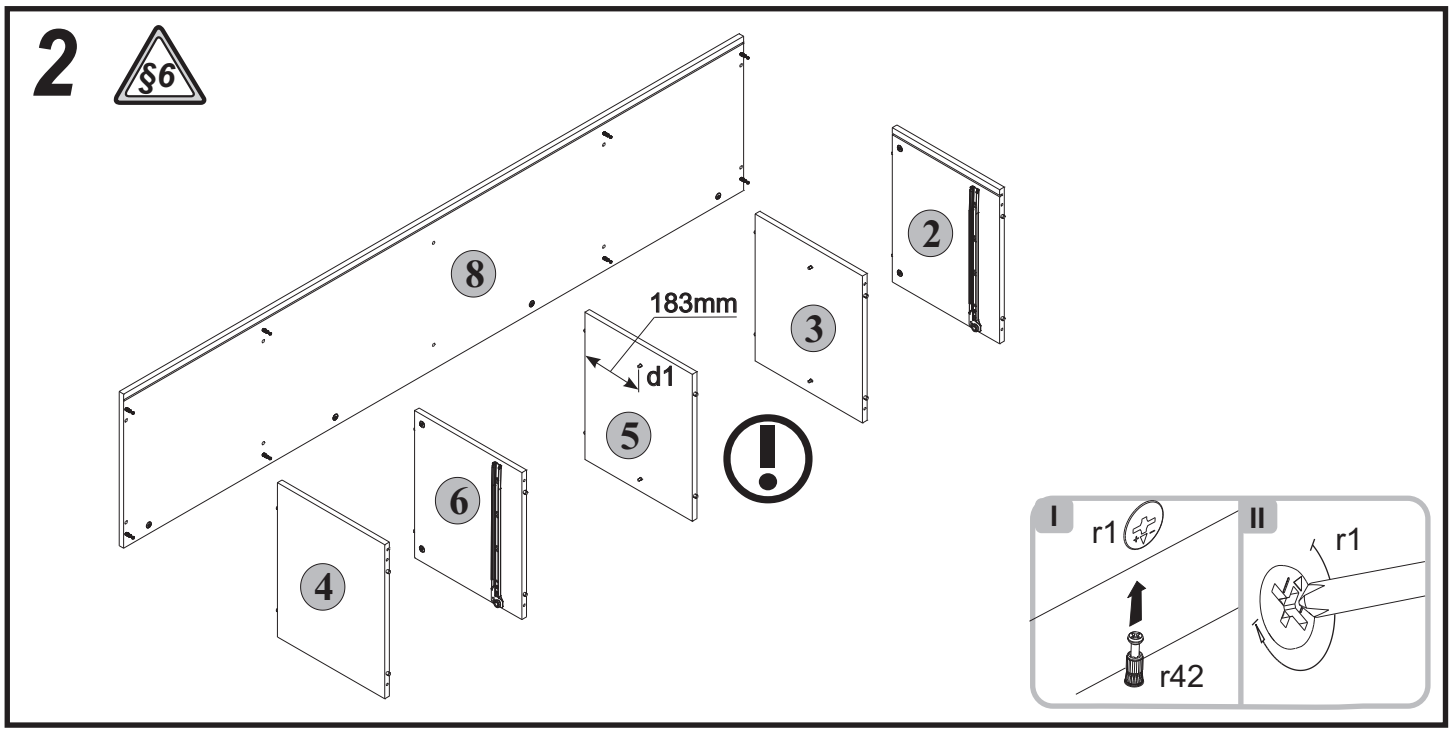
2
§6
8
183mm
d1
2
3
5
6
4
I
II
r1
r42

# 3

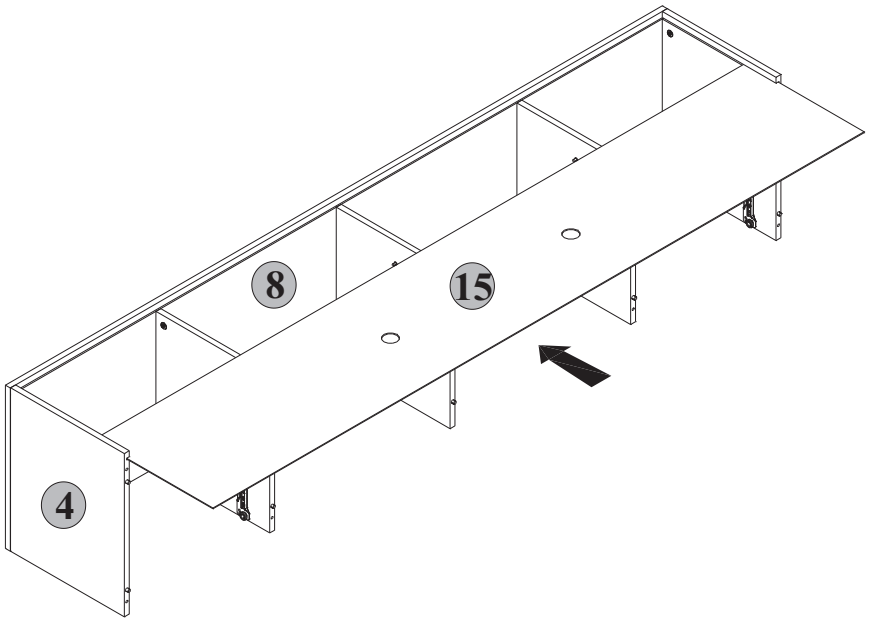
8
15
4

# 4

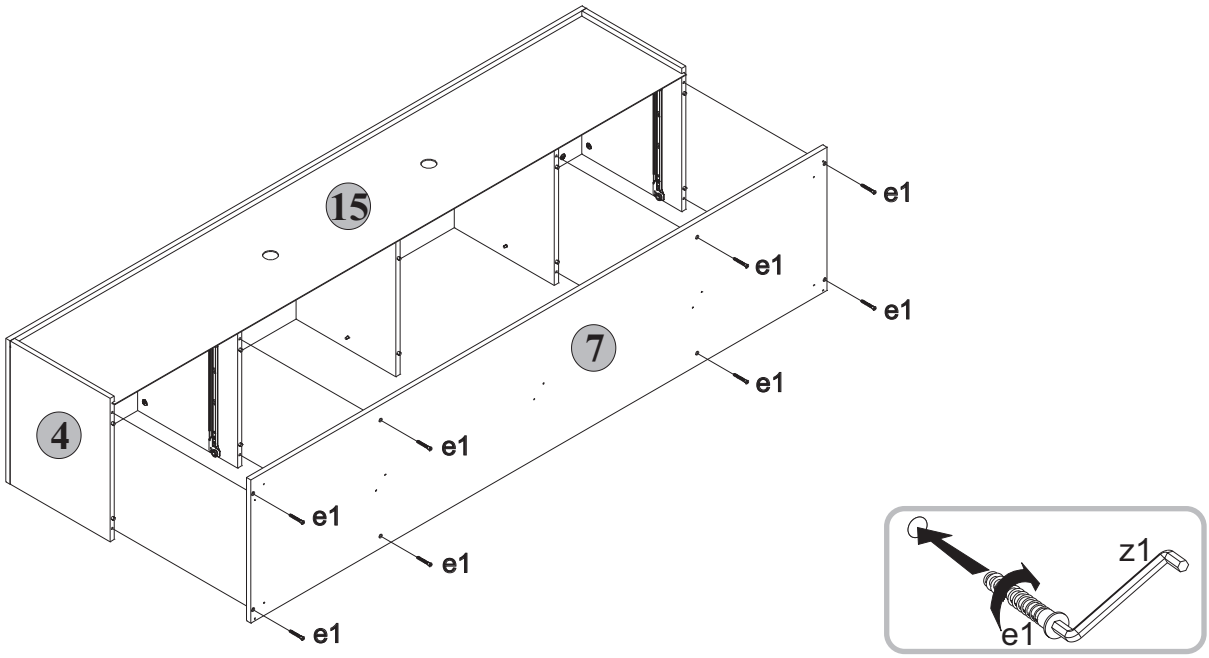
15
4
7
e1
e1
e1
e1
e1
e1
e1
e1
z1
e1

# 5

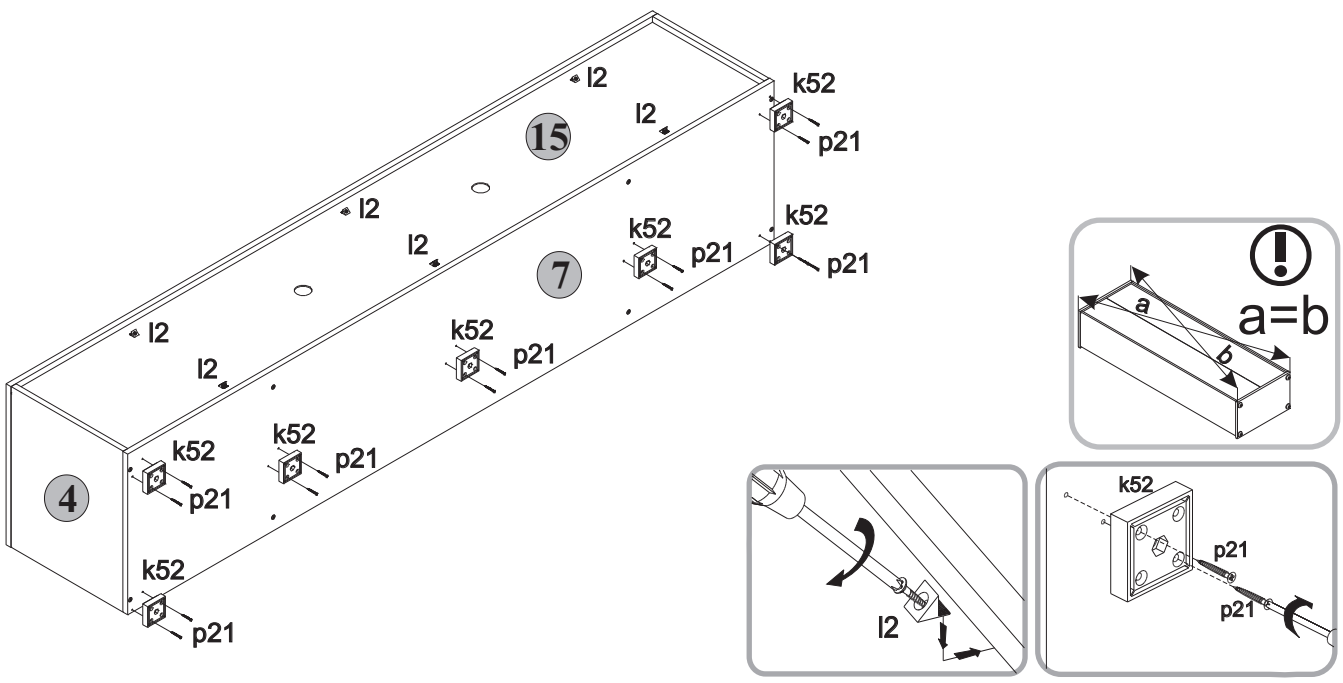
l2
l2
l2
l2
l2
l2
15
7
4
k52
p21
k52
p21
k52
p21
k52
p21
k52
p21
k52
p21
k52
p21
a
b
a=b
l2
k52
p21
p21

# 6

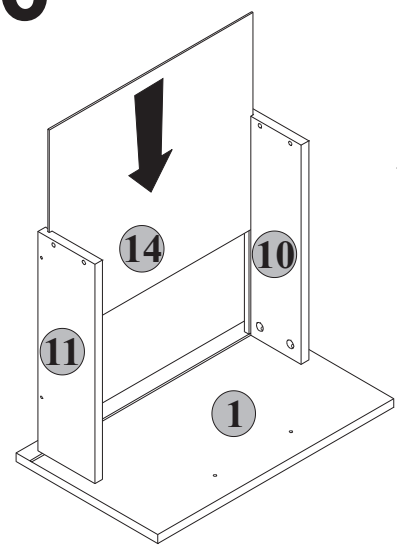
14
10
11
1

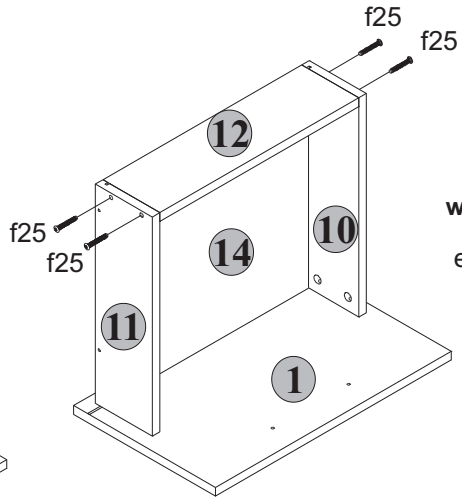
f25
f25
f25
f25
12
14
10
11
1

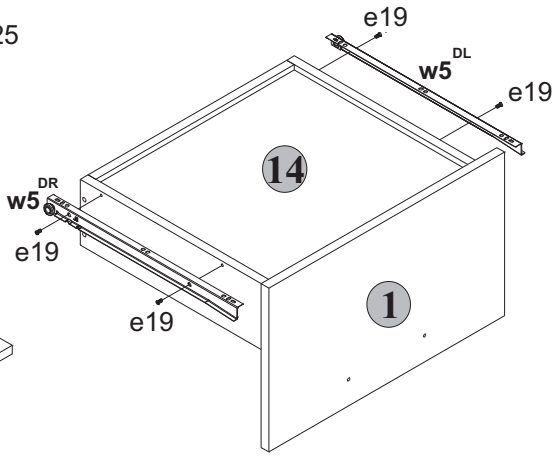
e19
w5 DL
e19
w5 DR
e19
e19
14
1

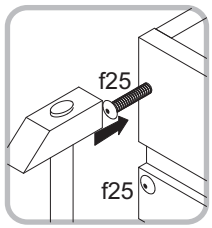
f25
f25

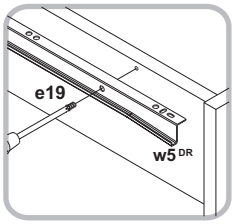
e19
w5 DR

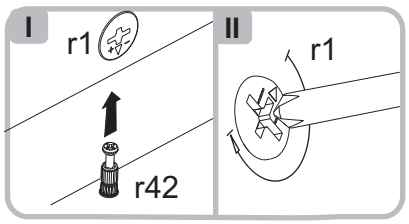
I
r1
r42
II
r1

# 7

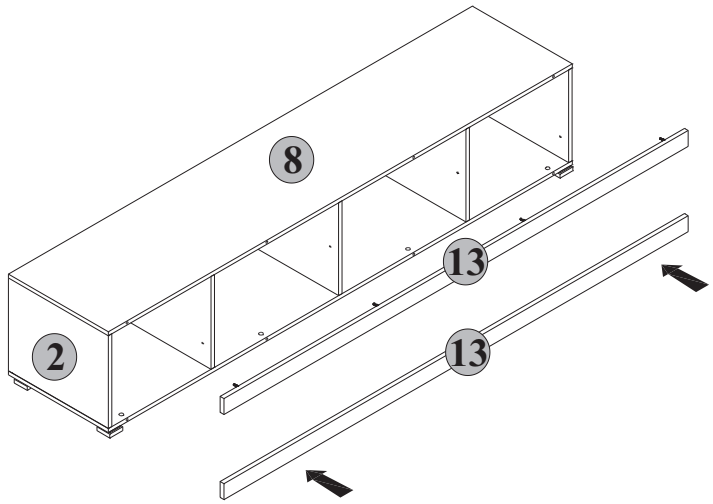
8
13
13
2

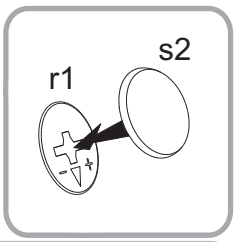
s2
r1

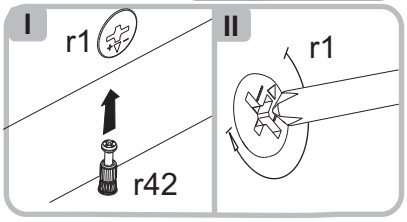
I
r1
r42
II
r1

# 8

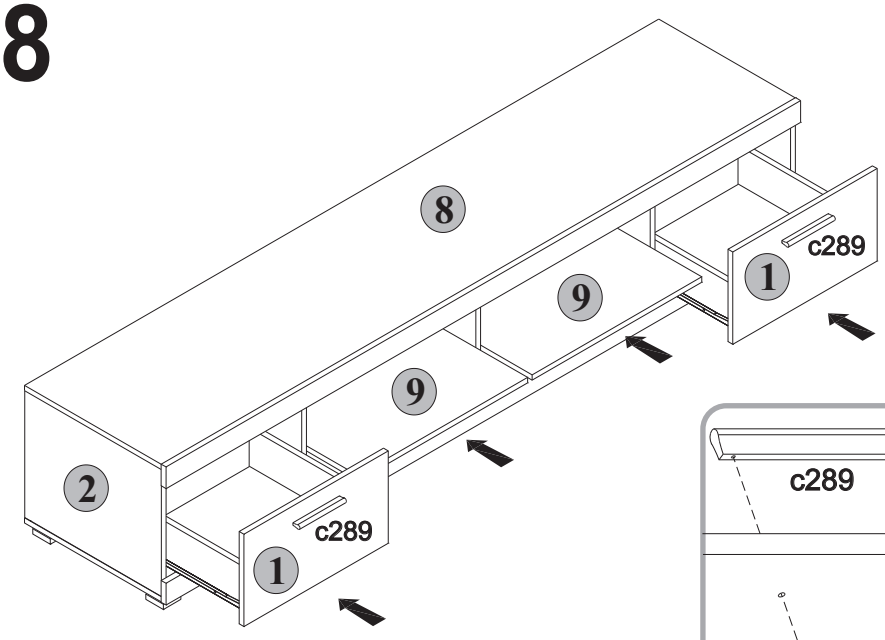
8
c289
1
9
9
2
c289
1

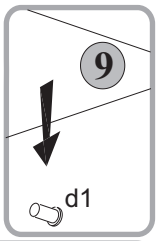
9
d1

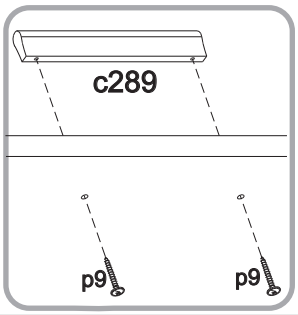
c289
p9
p9

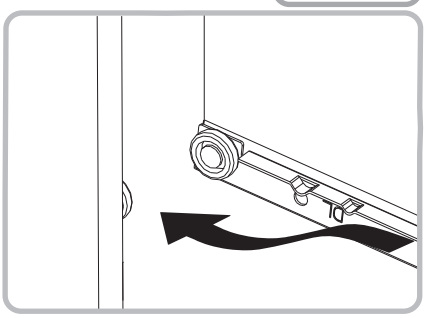

89-531

# CANCAN

S300-REG2D2W
S300-REG2D2W/BO

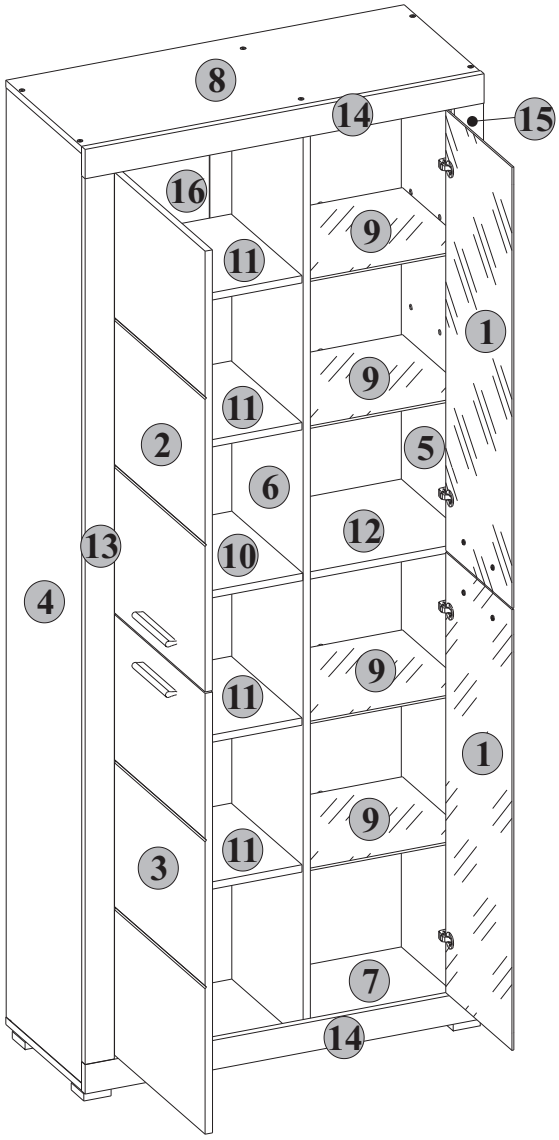


§1

| A | B | C | D |
|---|---|---|---|
| 1 | S300-001 | 900x292 | 1/2 |
| 2 | S300-002 | 900x400 | 2/2 |
| 3 | S300-003 | 900x400 | 2/2 |
| 4 | S300-101 | 1898x335 | 2/2 |
| 5 | S300-102 | 1898x335 | 2/2 |
| 6 | S300-103 | 1898x315 | 2/2 |
| 7 | S300-201 | 820x335 | 1/2 |
| 8 | S300-202 | 820x335 | 1/2 |
| 9 | S300-301 | 333x307 | 1/2 |
| 10 | S300-302 | 440x314 | 1/2 |
| 11 | S300-303 | 439x312 | 1/2 |
| 12 | S300-304 | 334x314 | 1/2 |
| 13 | S300-503 | 1809x60 | 2/2 |
| 14 | S300-504 | 821x60 | 2/2 |
| 15 | S300-518 | 1809x60 | 2/2 |
| 16 | S300-901 | 1912x803 | 2/2 |

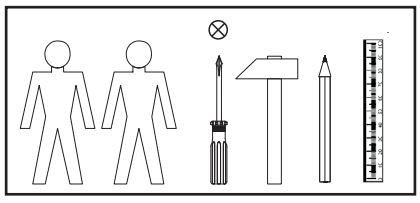

§14

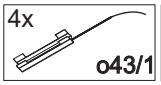
4x o43/1

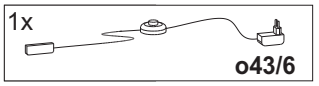
1x o43/6

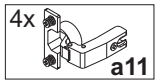
4x a11

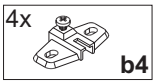
4x b4

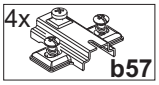
4x b57

8x ϕ3x9 mm p32

16x ϕ5 d1

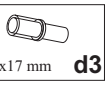
16x ϕ5x17 mm d3

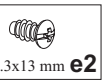
8x ϕ6.3x13 mm e2

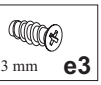
8x ϕ6x13 mm e3

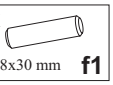
20x ϕ8x30 mm f1

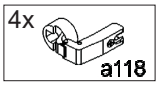
4x a118

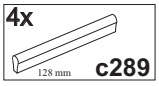
4x 128 mm c289

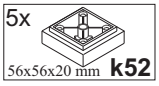
5x 56x56x20 mm k52

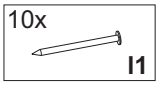
10x l1

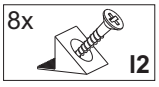
8x l2

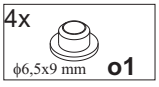
4x ϕ6,5x9 mm o1

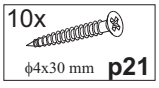
10x ϕ4x30 mm p21

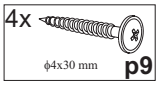
4x ϕ4x30 mm p9

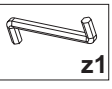
1x z1

4x a66/9

4x a66/8

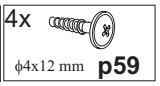
4x ϕ4x12 mm p59

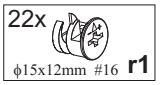
22x ϕ15x12mm #16 r1

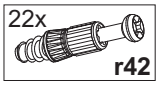
22x r42

14x ø16 s2

12x ϕ7x50 mm e1

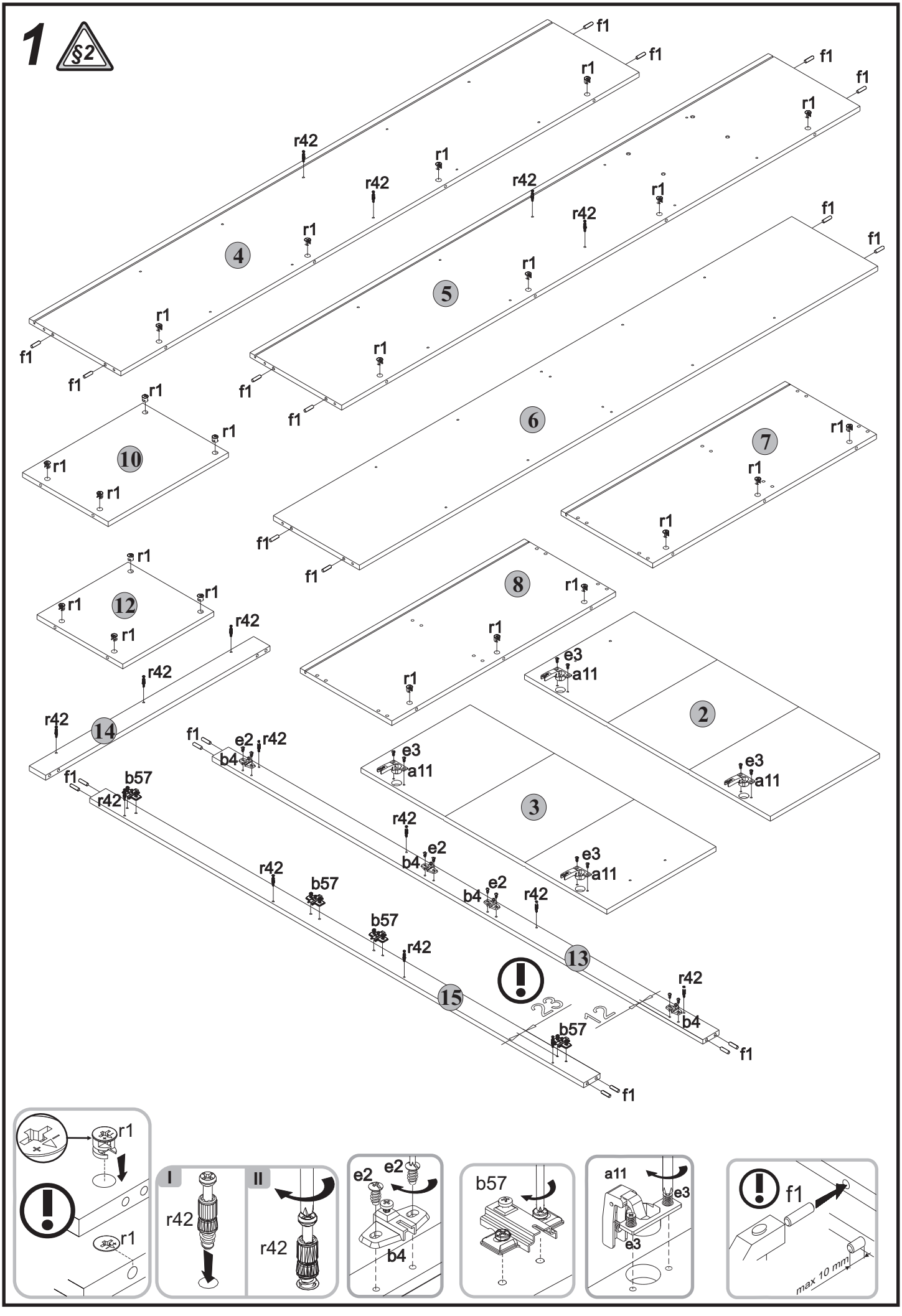
1
§2
f1
r1
r42
4
5
6
7
8
10
12
14
2
3
13
15
e3
a11
e2
b4
b57
23
12
I
II
max 10 mm

## 2 §6

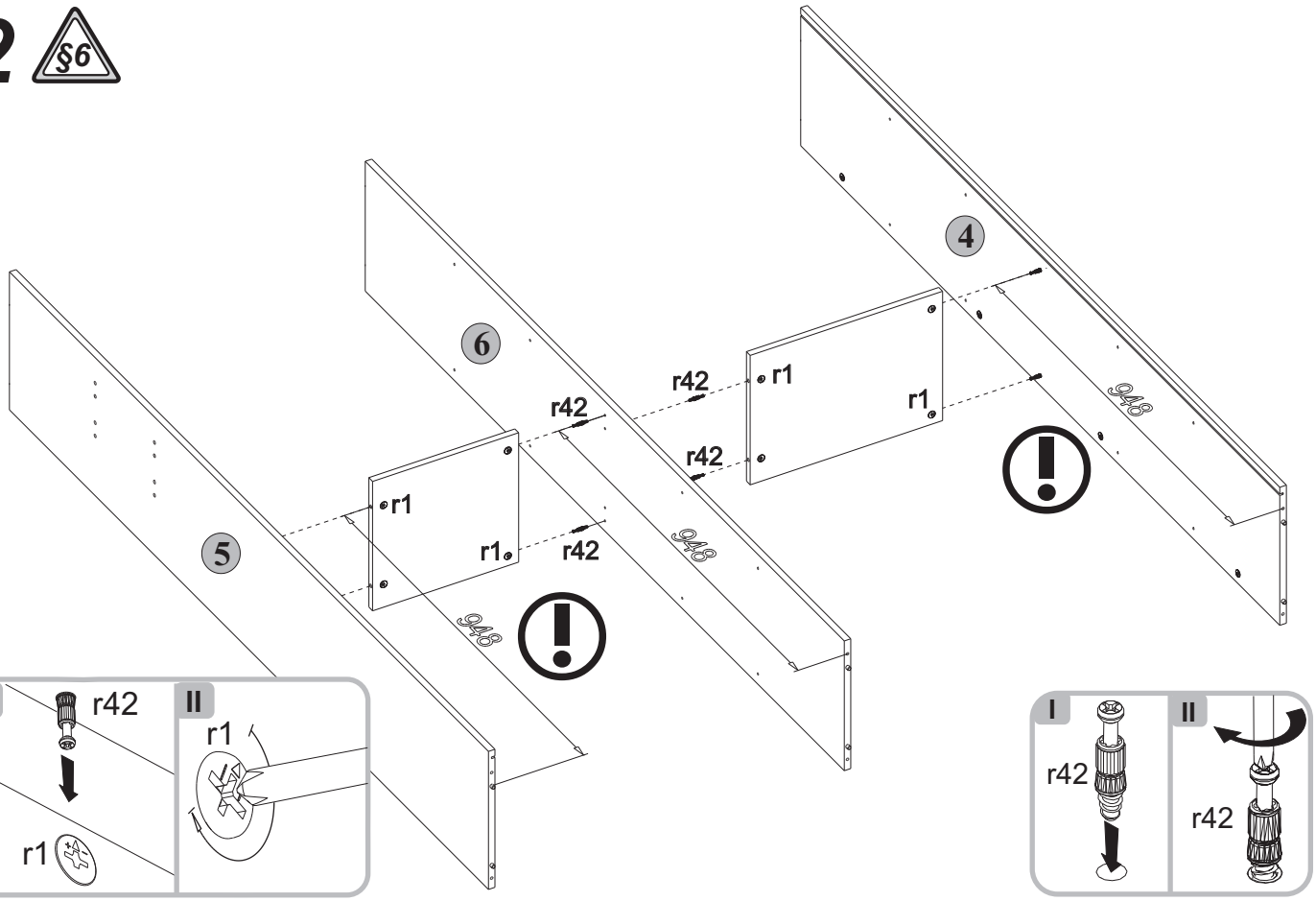
4
6
5
r42
r1
r1
r42
r42
r1
r1
r42
948
948
948
I
r42
r1
II
r1
I
r42
II
r42

## 3

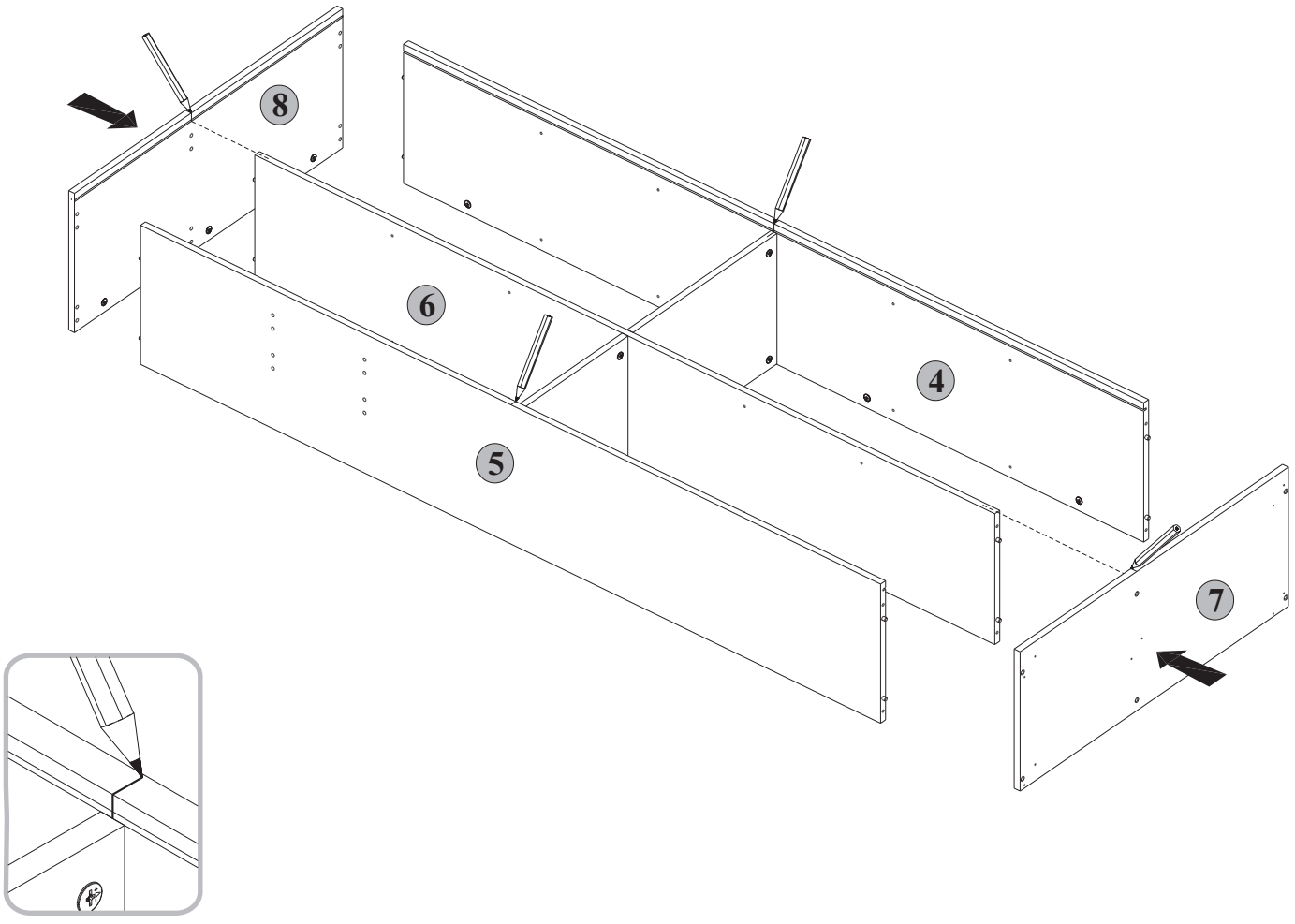
8
6
4
5
7

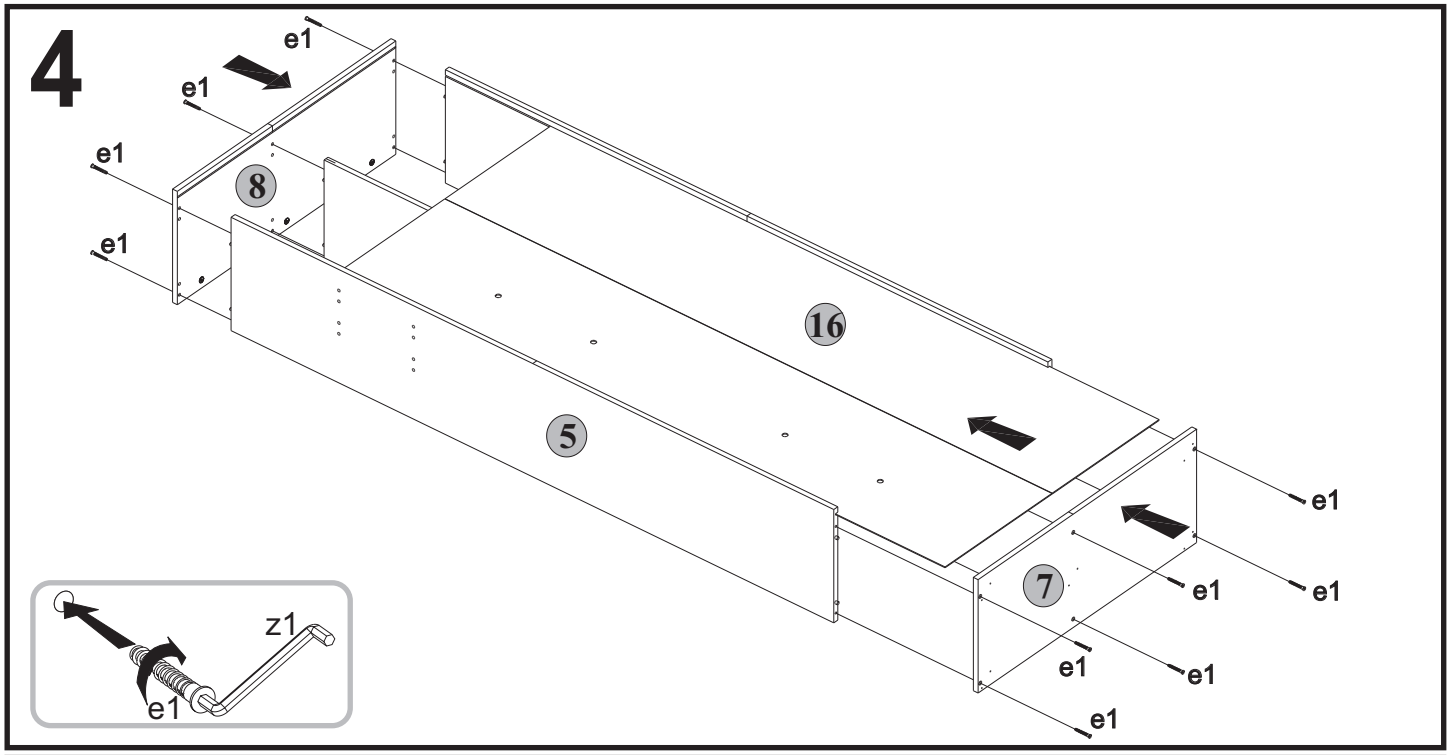
4
e1
e1
e1
e1
8
16
5
7
e1
e1
e1
e1
e1
e1
z1
e1

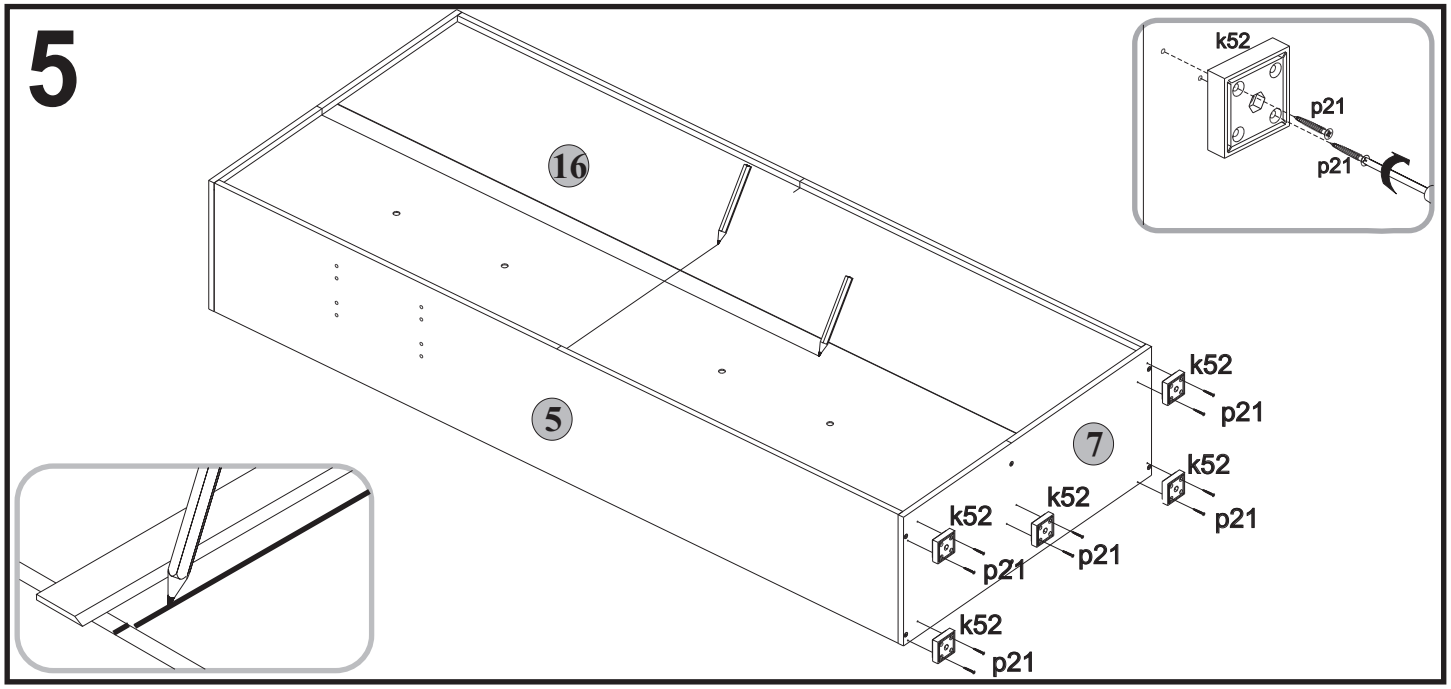
5
16
5
7
k52
p21
p21
k52
p21
k52
p21
k52
p21
k52
p21
k52
p21

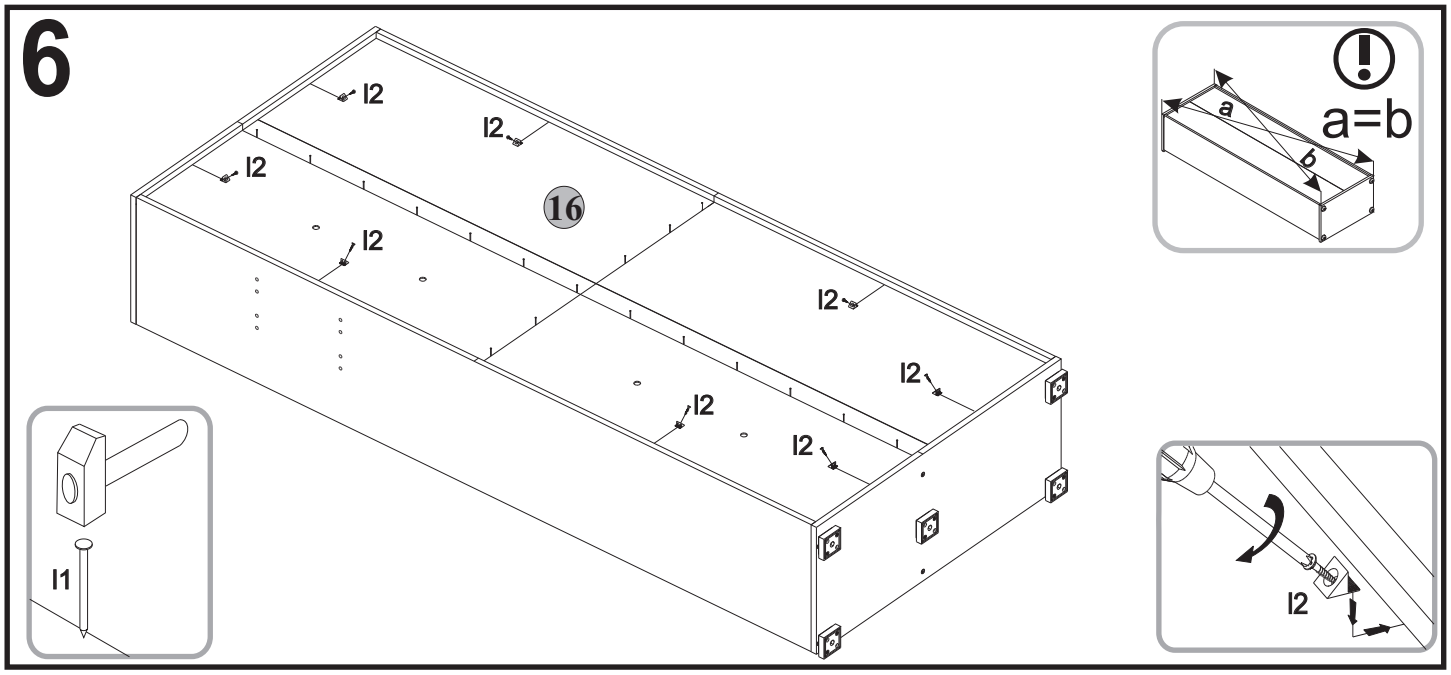
6
l2
l2
l2
l2
16
l2
l2
l2
l2
l2
a
b
a=b
l1
l2

# 7

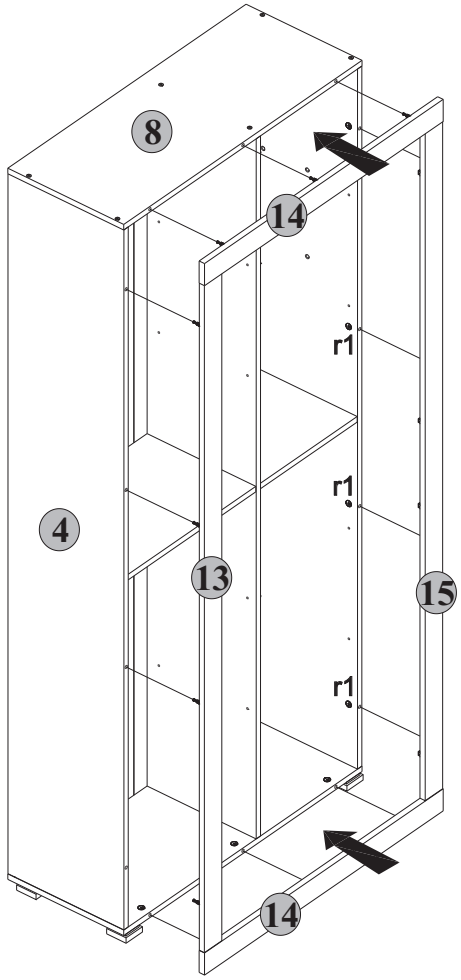
8
14
r1
r1
4
13
15
r1
14

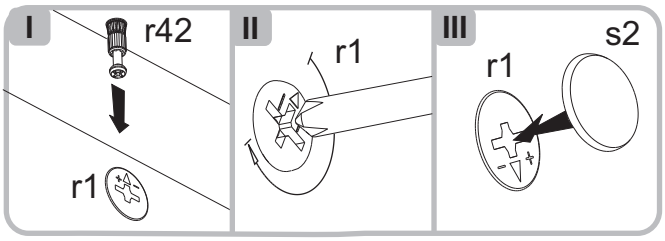
I
r42
r1
II
r1
III
s2
r1

# 8

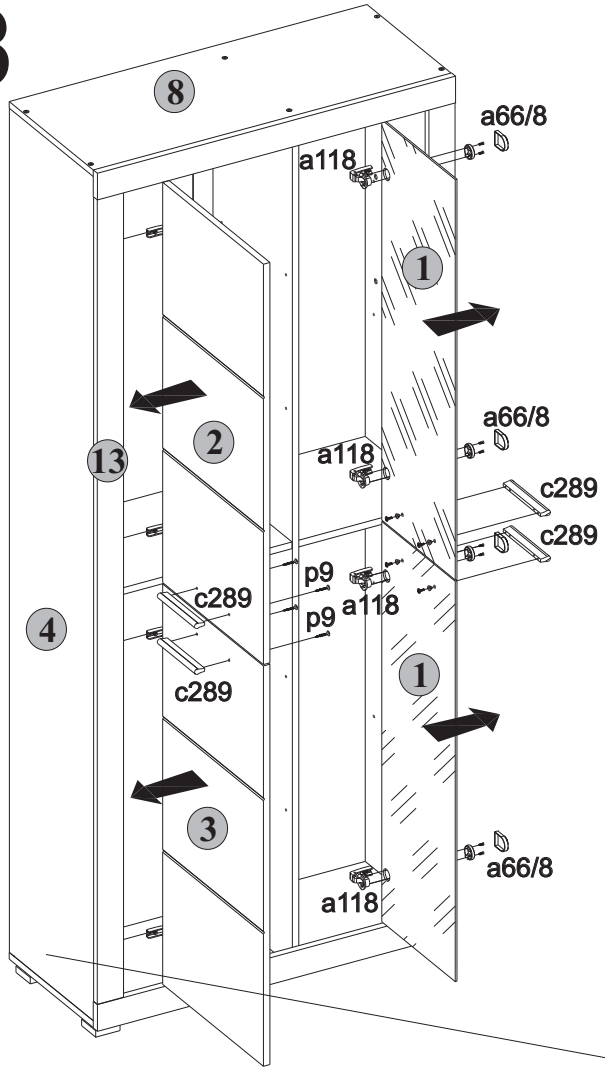
8
a66/8
a118
1
a66/8
a118
c289
c289
13
2
p9
a118
p9
c289
4
1
c289
3
a66/8
a118

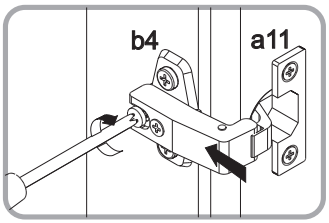
b4
a11

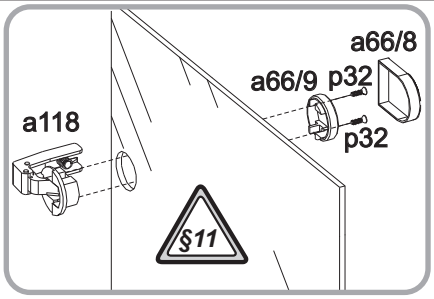
a66/8
a66/9
p32
p32
a118
§11

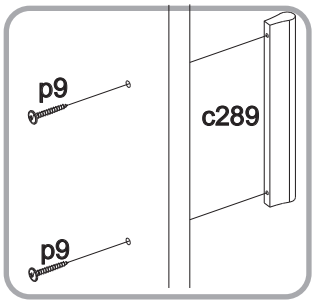
p9
c289
p9

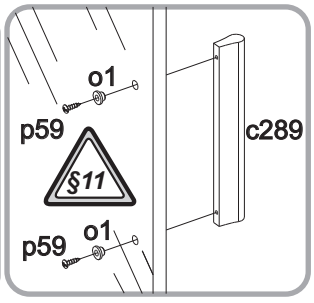
o1
p59
§11
c289
p59
o1

§10

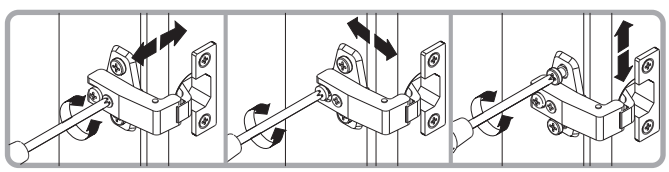

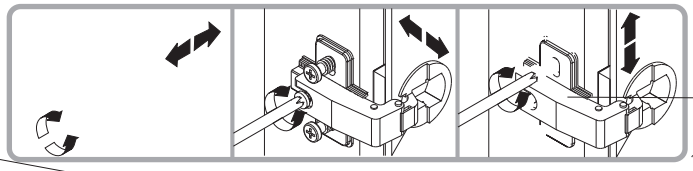

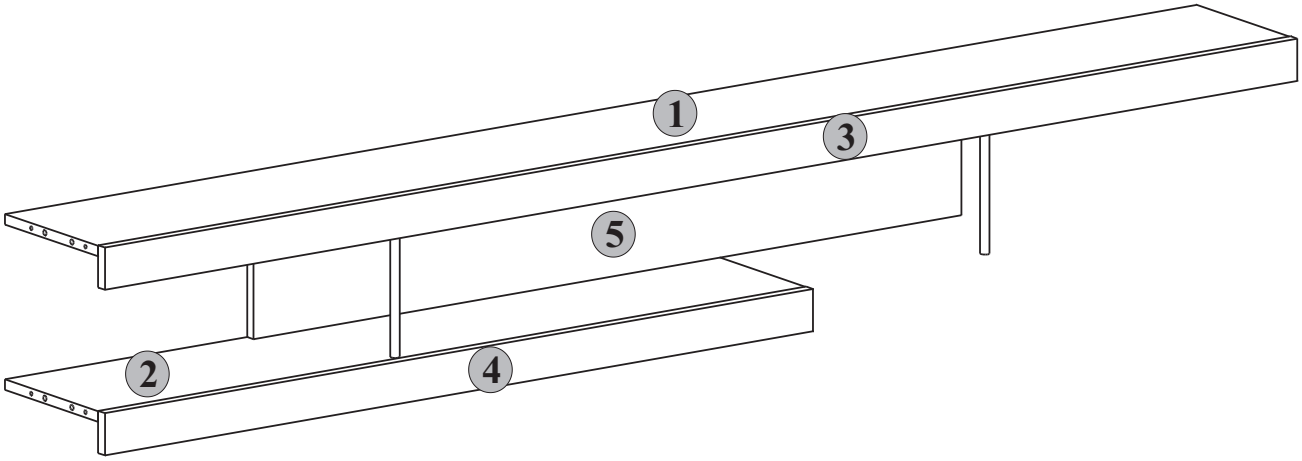


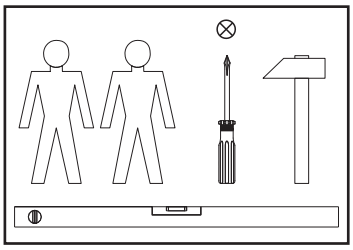

§1

| A | B | C | D |
|---|---|---|---|
| 1 | S300-306 | 2020x220 | 6/6 |
| 2 | S300-307 | 1200x220 | 6/6 |
| 3 | S300-507 | 2021x60 | 6/6 |
| 4 | S300-512 | 1200x60 | 6/6 |
| 5 | S300-513 | 1200x220 | 6/6 |

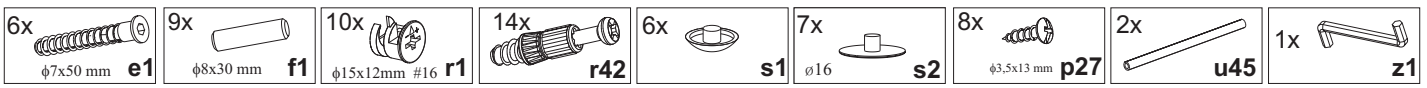


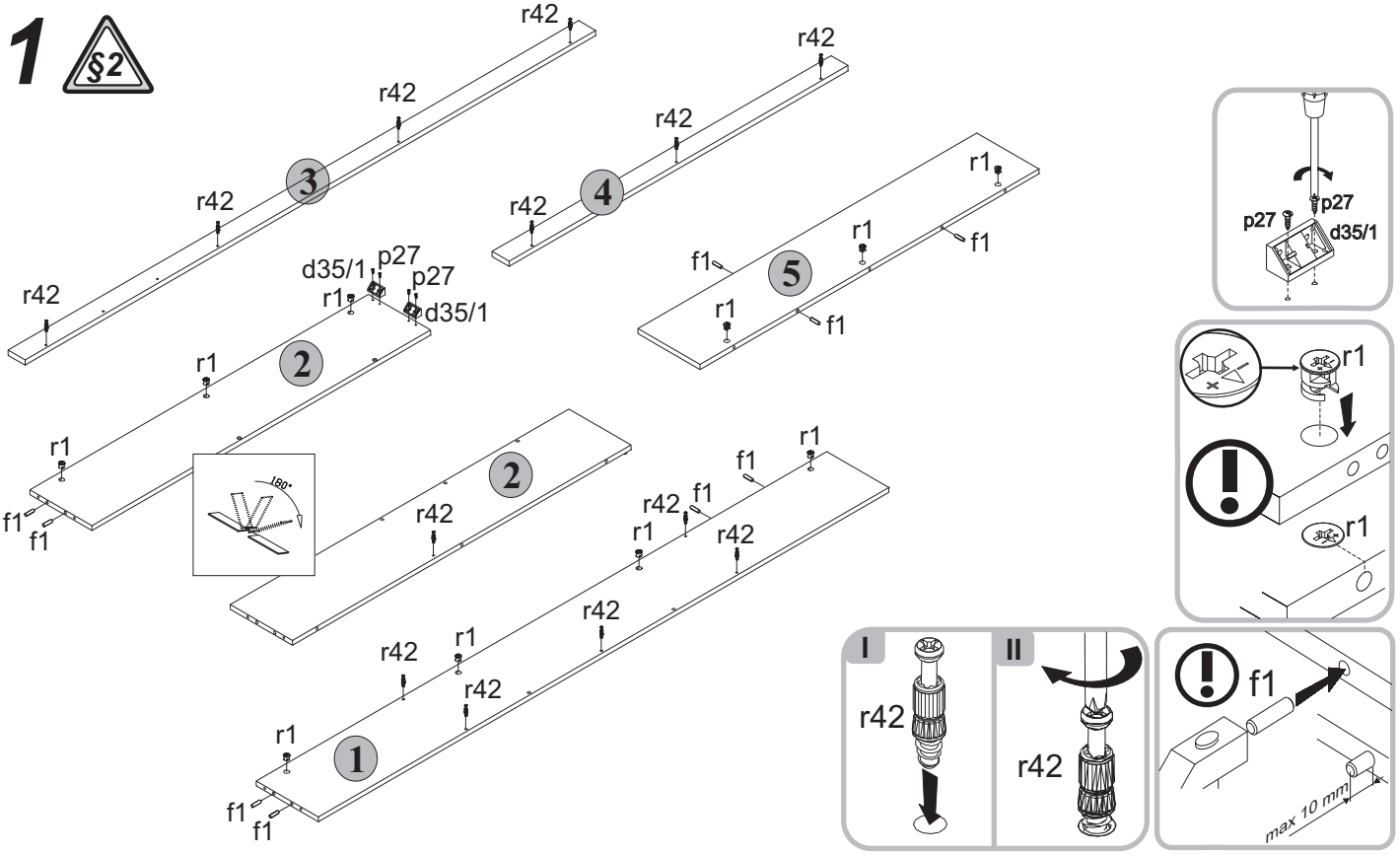

## 2

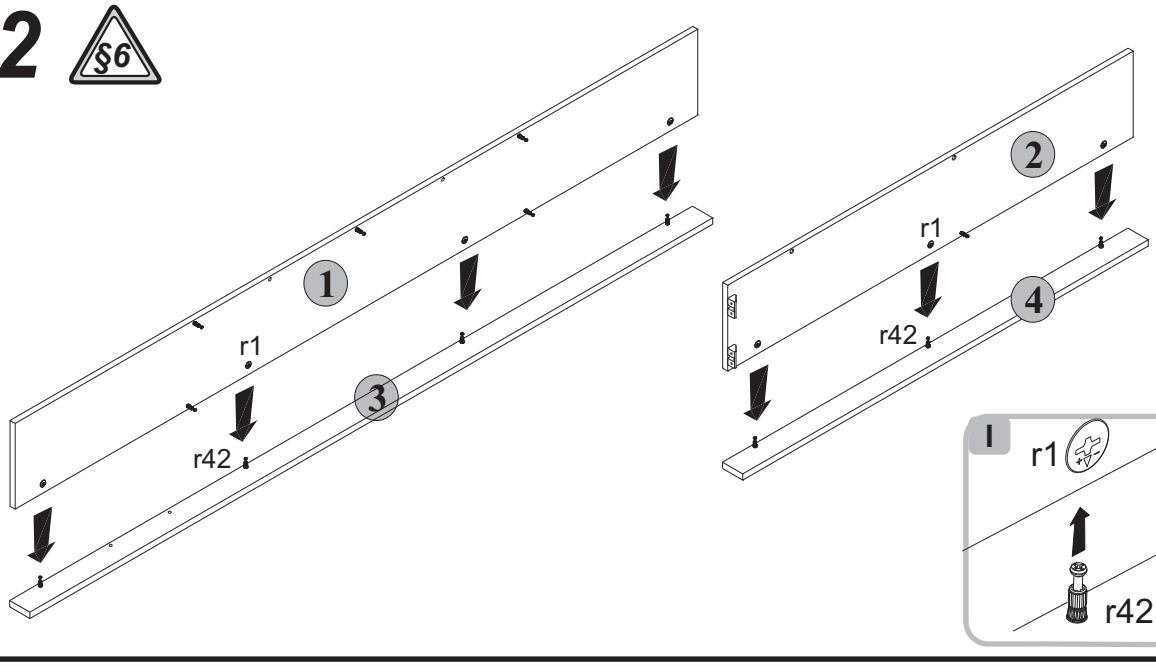
§6
1
r1
r42
3
2
r1
4
r42
I
r1
r42
II
r1

## 3

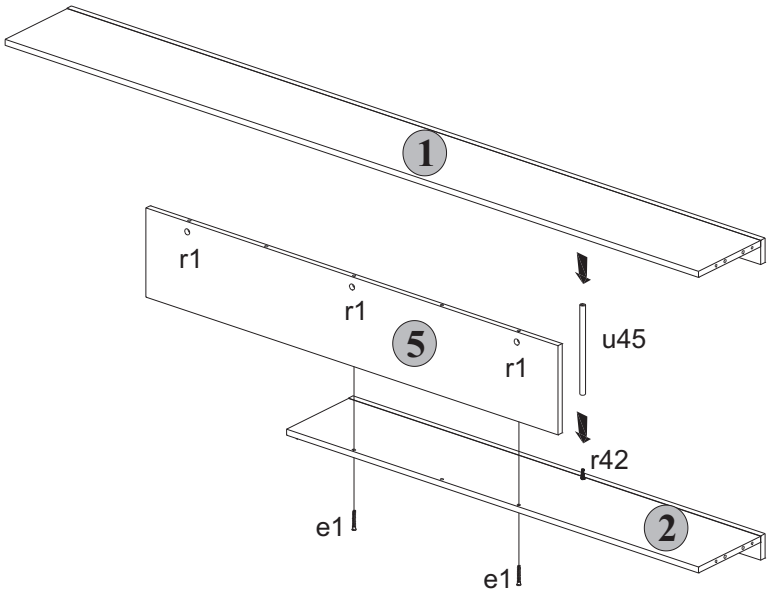
1
r1
r1
5
r1
u45
r42
2
e1
e1

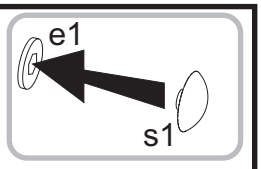
e1
s1

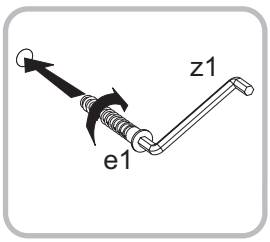
z1
e1

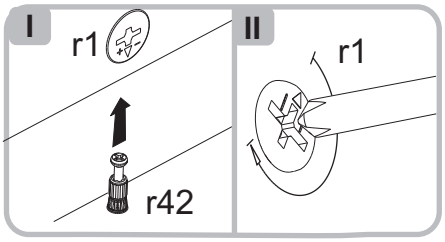
I
r1
r42
II
r1

## 4

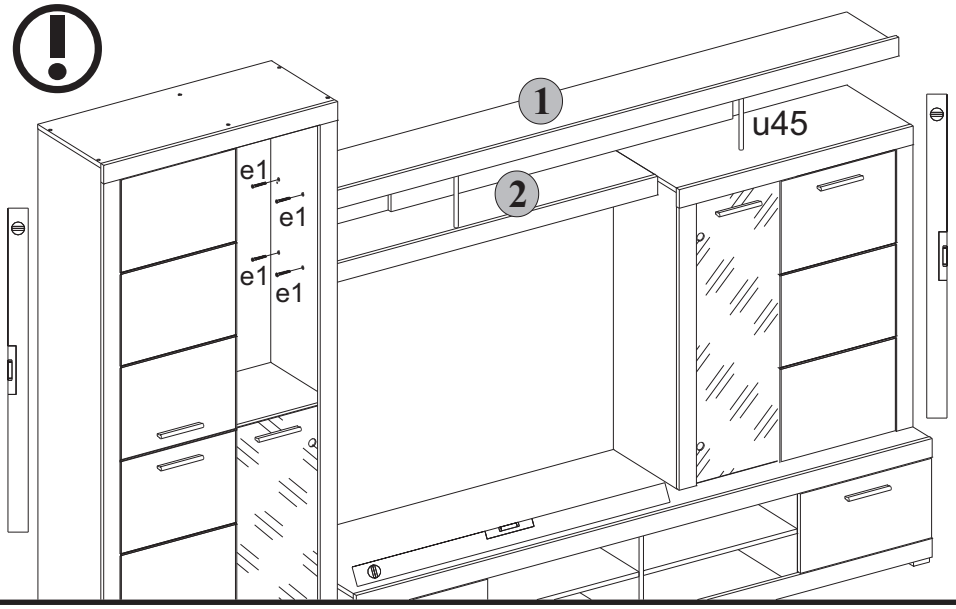
1
u45
2
e1
e1
e1
e1

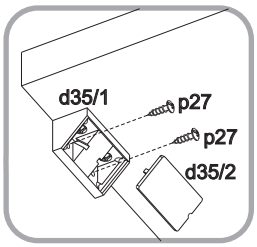
d35/1
p27
p27
d35/2

u45
r42

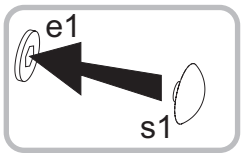
e1
s1

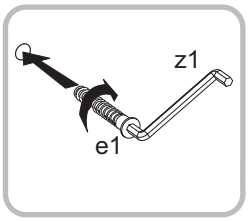
z1
e1