TIZIO 12

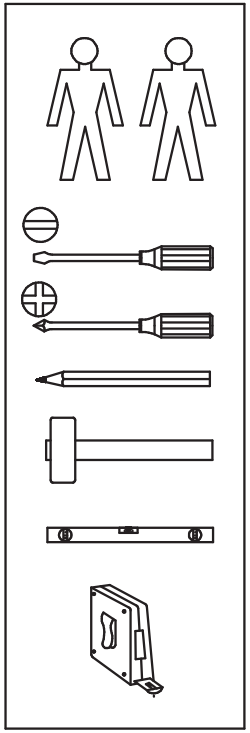

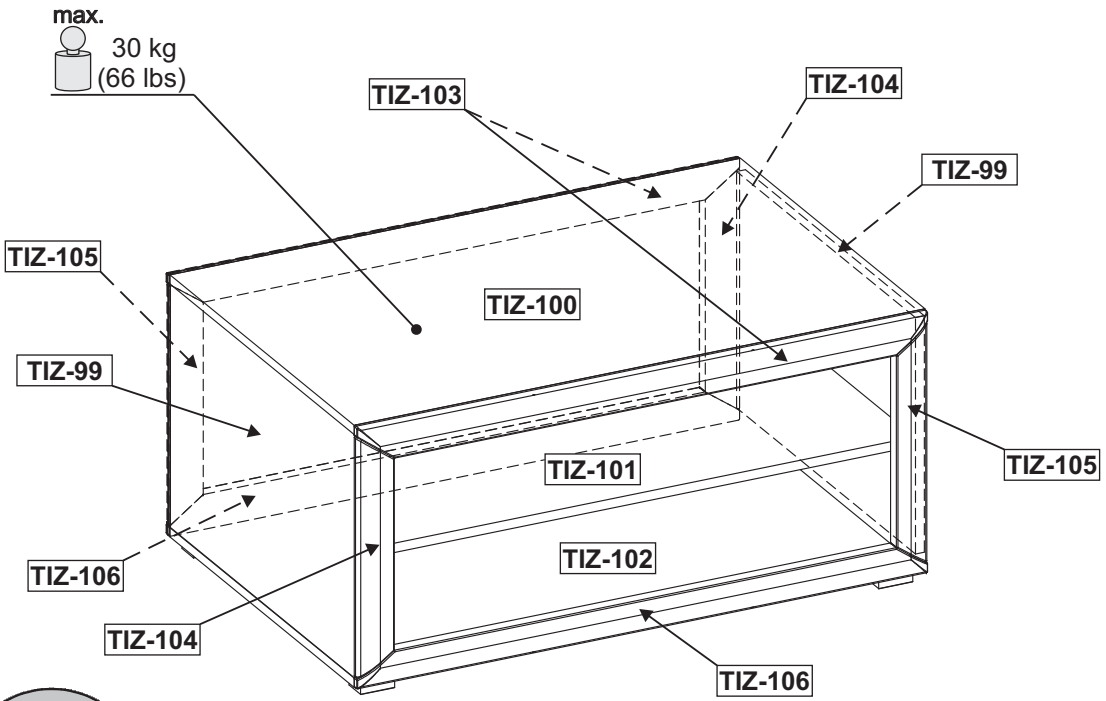

TIZ-99		646x418x16	C 1/1
TIZ-100		1000x646x16	C 1/1
TIZ-101		966x644x16	C 1/1
TIZ-102		1000x646x16	C 1/1
TIZ-103		1000x60x22	C 1/1
TIZ-104		412x60x22	C 1/1
TIZ-105		412x60x22	C 1/1
TIZ-106		1000x60x22	C 1/1

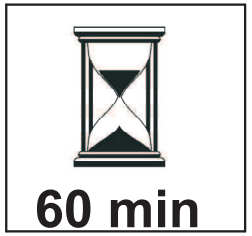

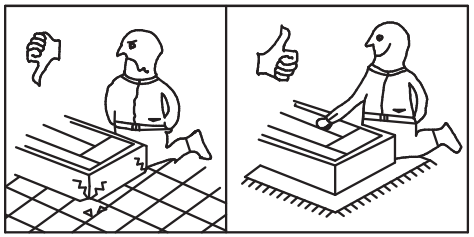

C 1/1

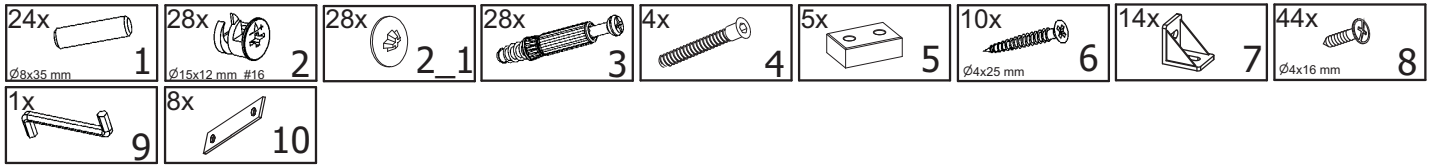

1

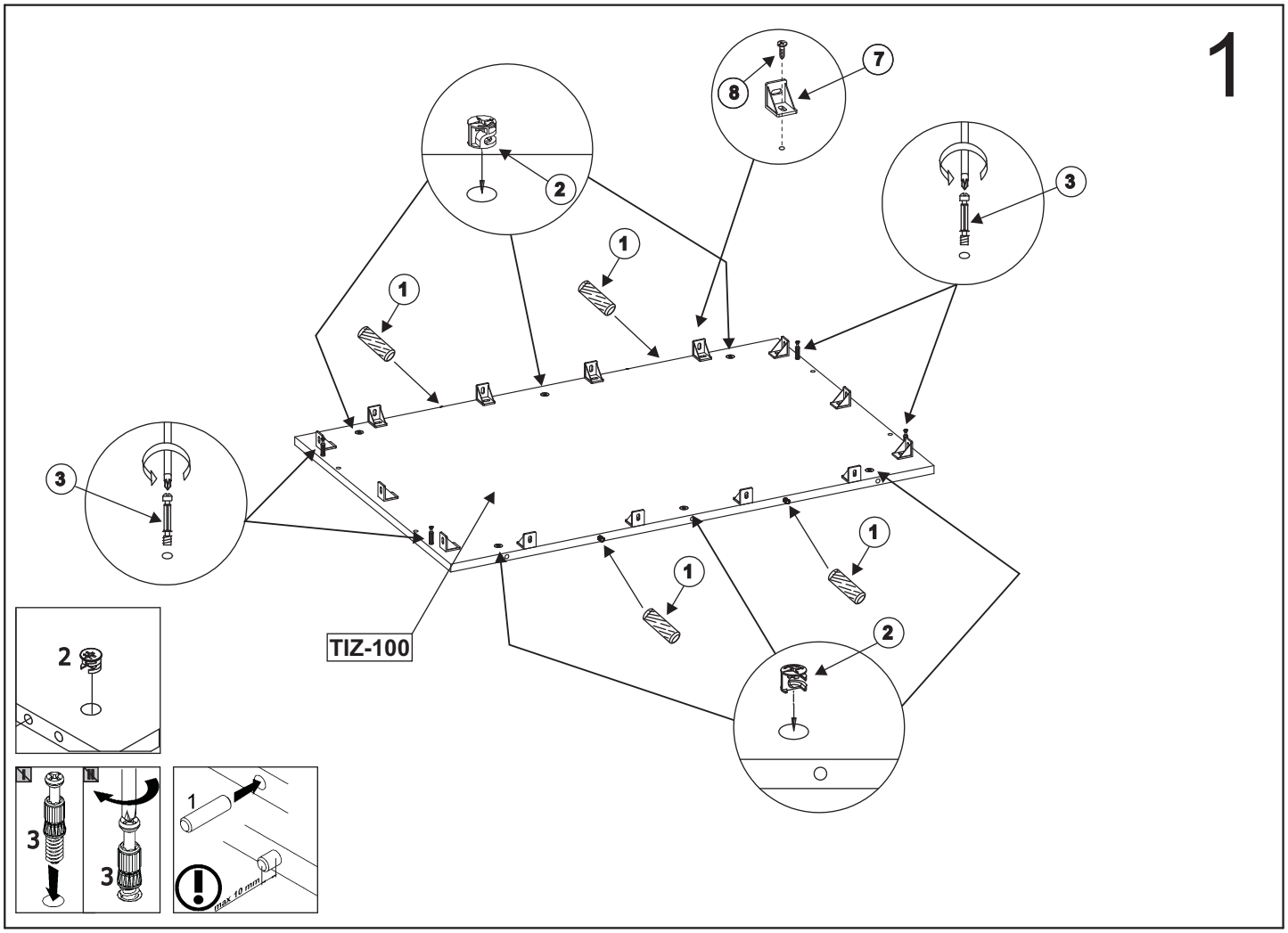
7
8
2
3
1
1
3
1
1
2
TIZ-100
2
3
3
1
max 10 mm

2

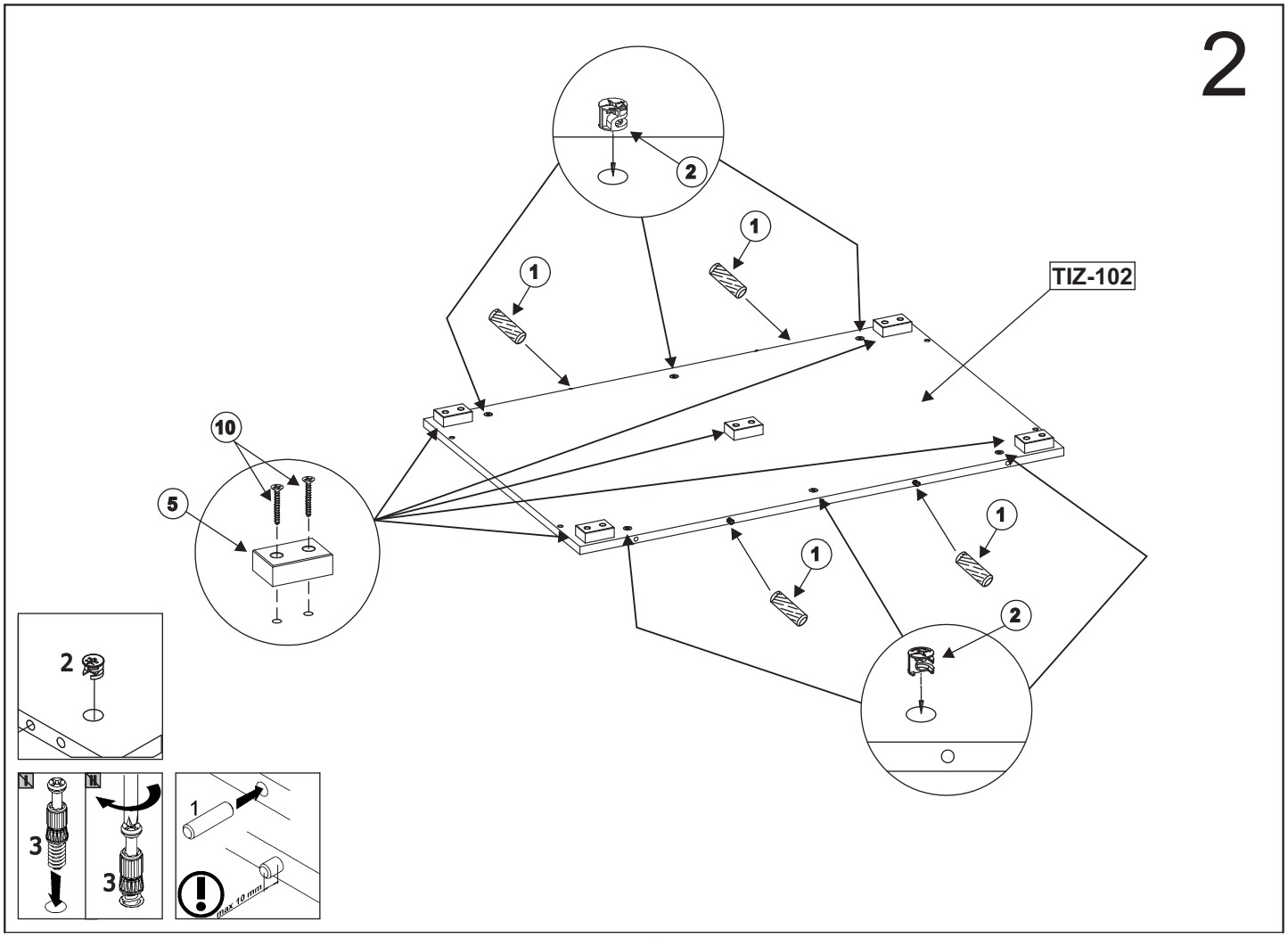
2
1
1
TIZ-102
10
5
1
1
2
2
3
3
1
max 10 mm

3

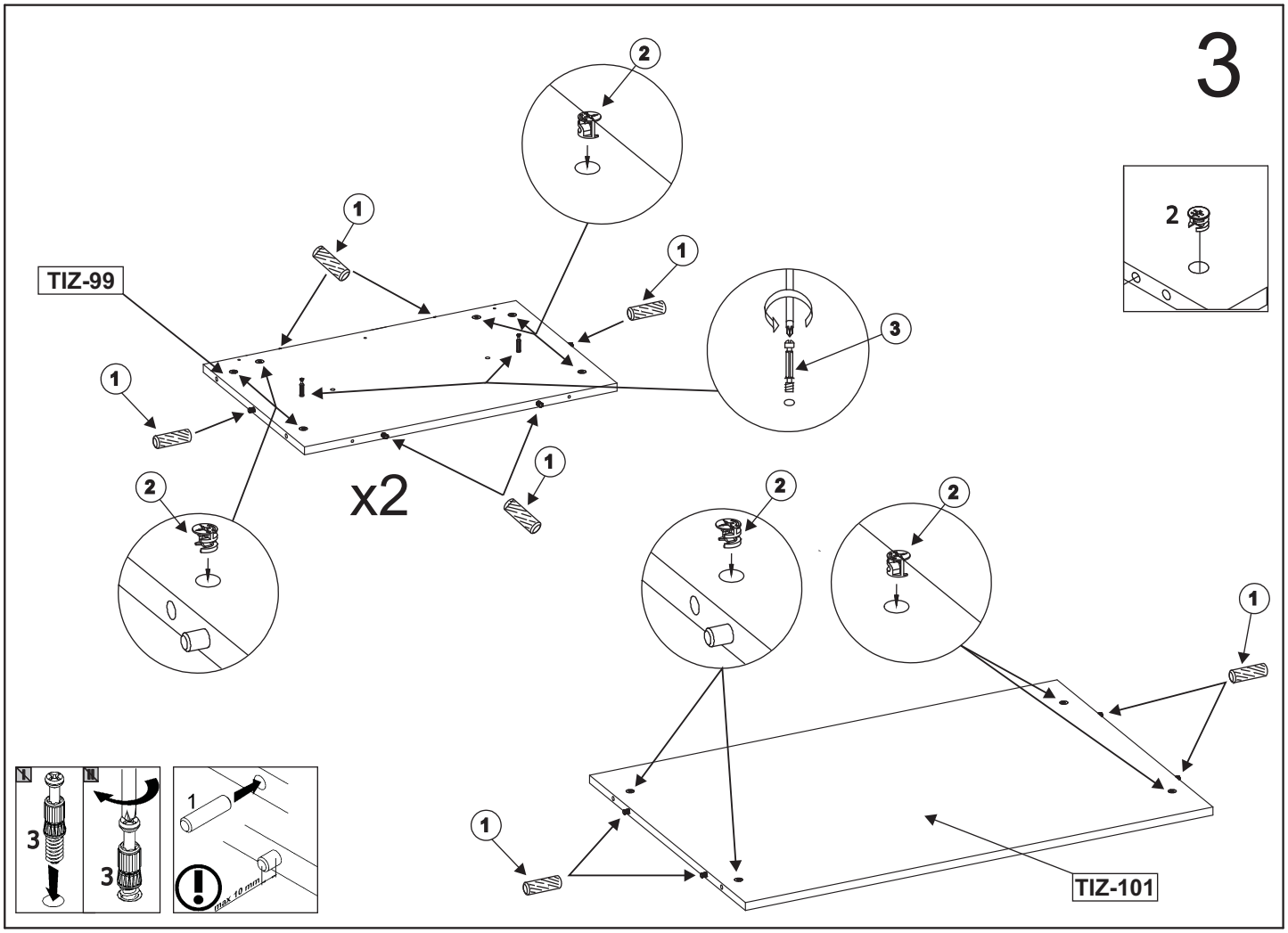

4

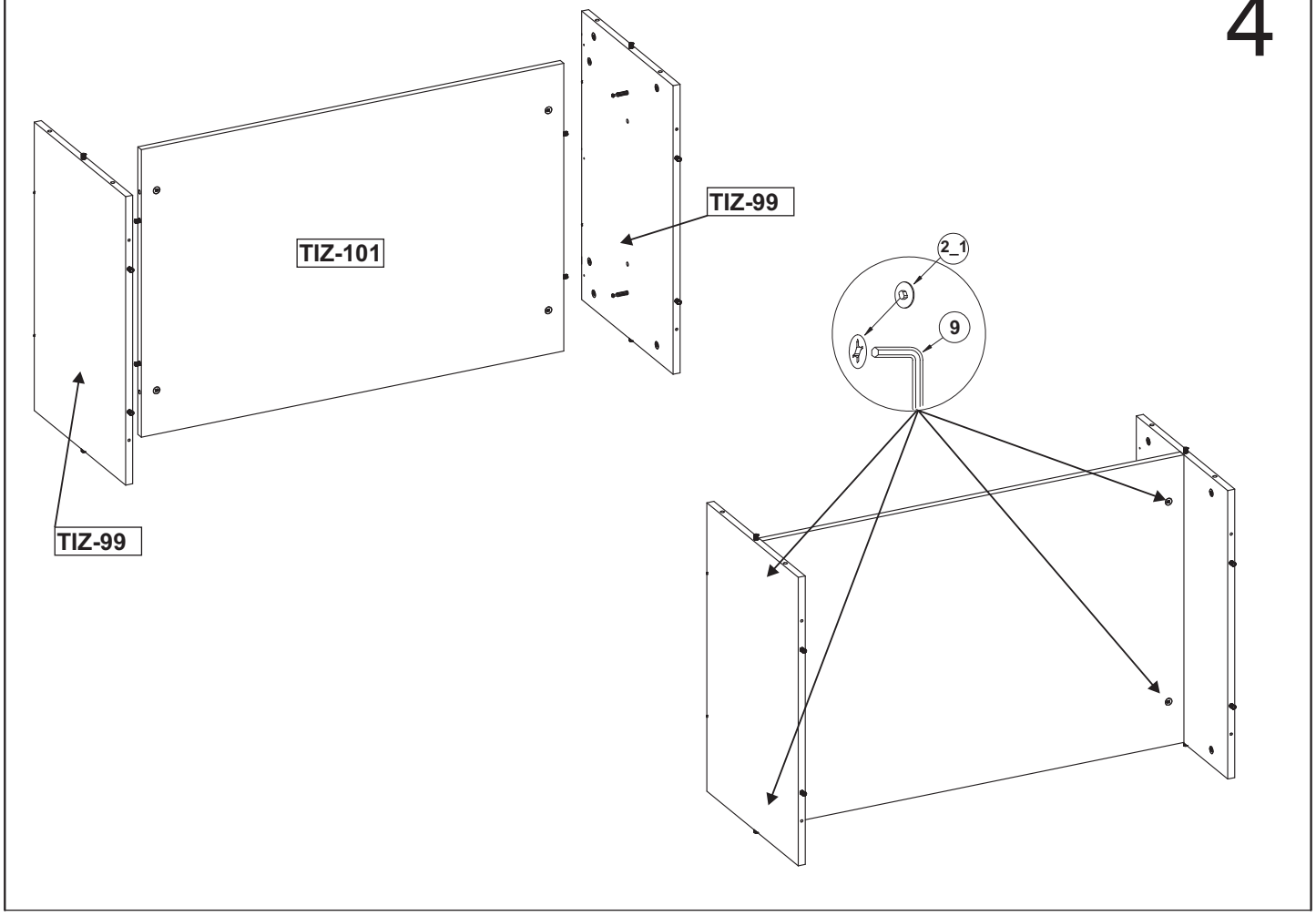

5

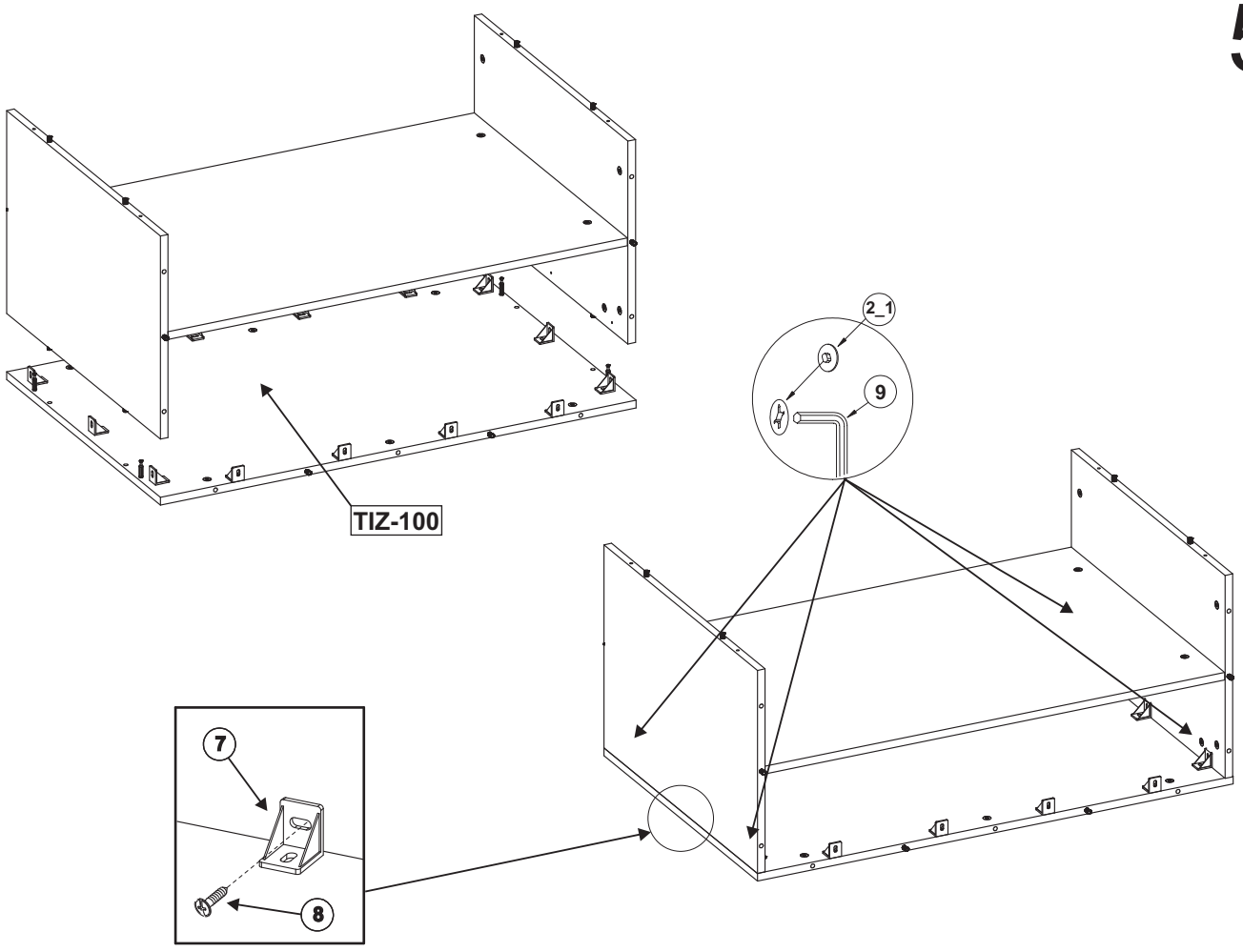

6

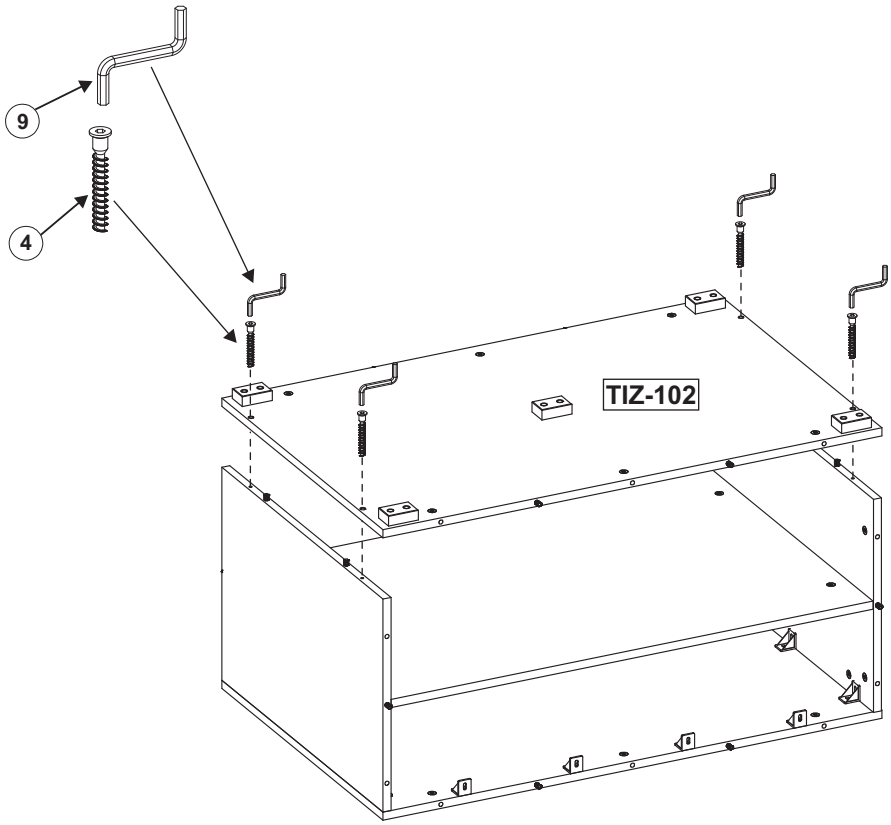

7

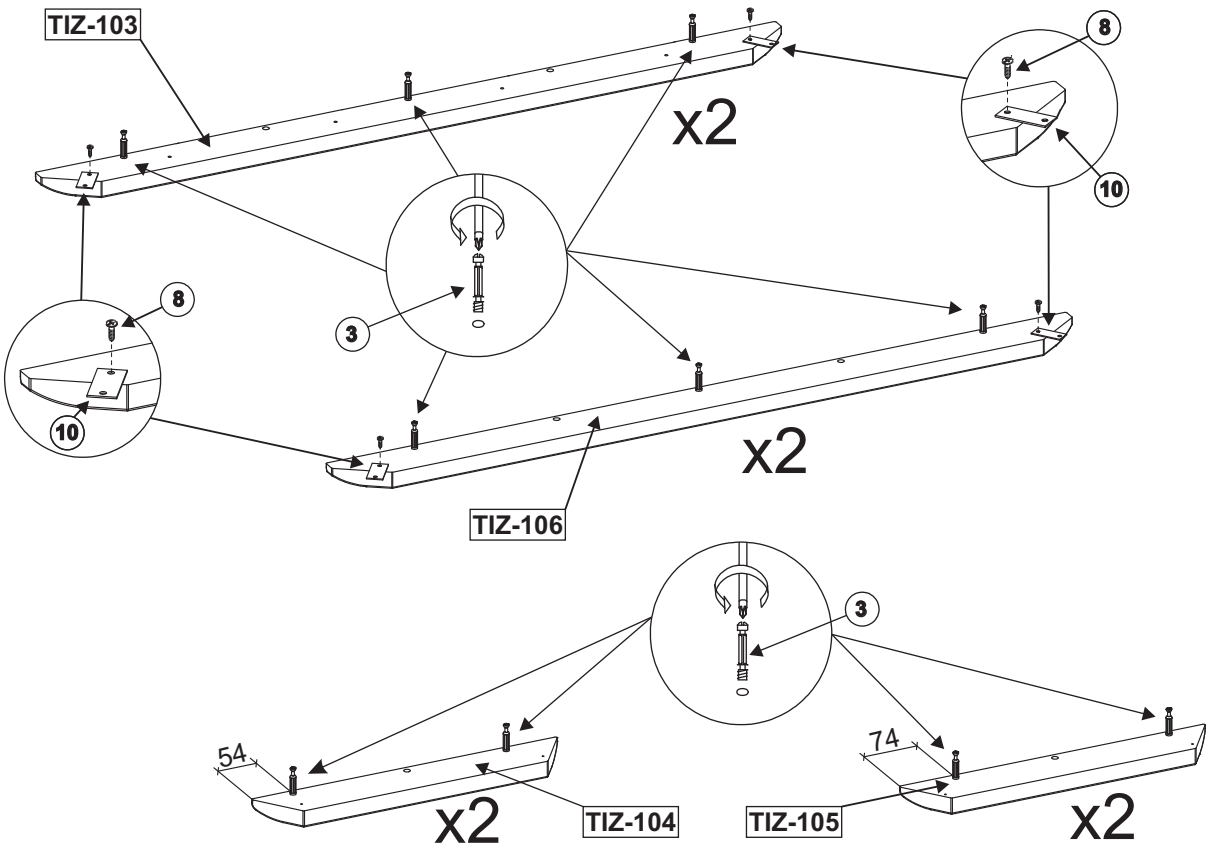
TIZ-103
x2
8
10
3
8
10
x2
TIZ-106
3
54
74
x2
TIZ-104
TIZ-105
x2

8

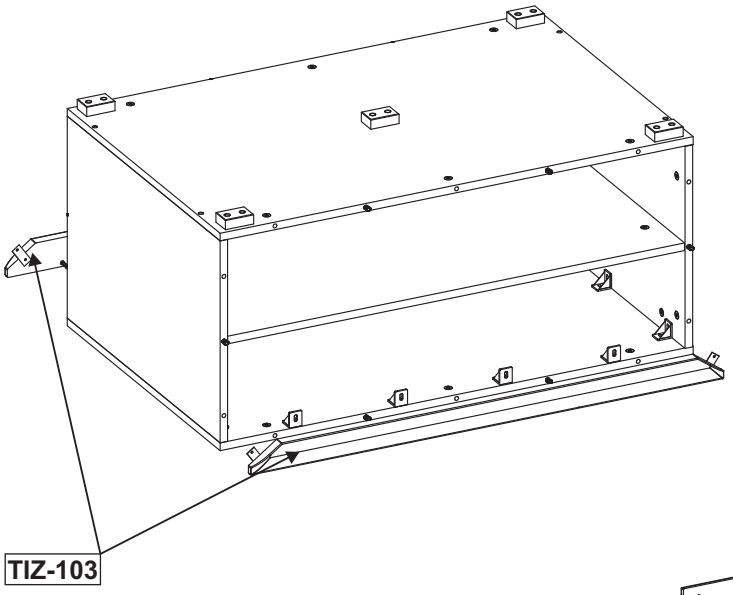
TIZ-103

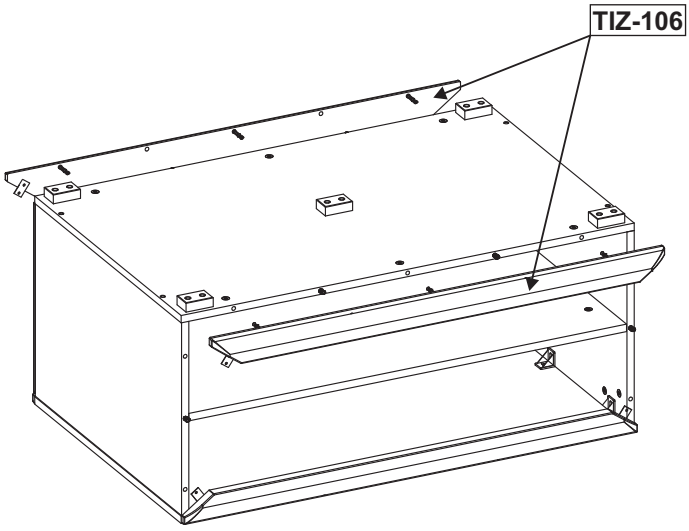
TIZ-106

9

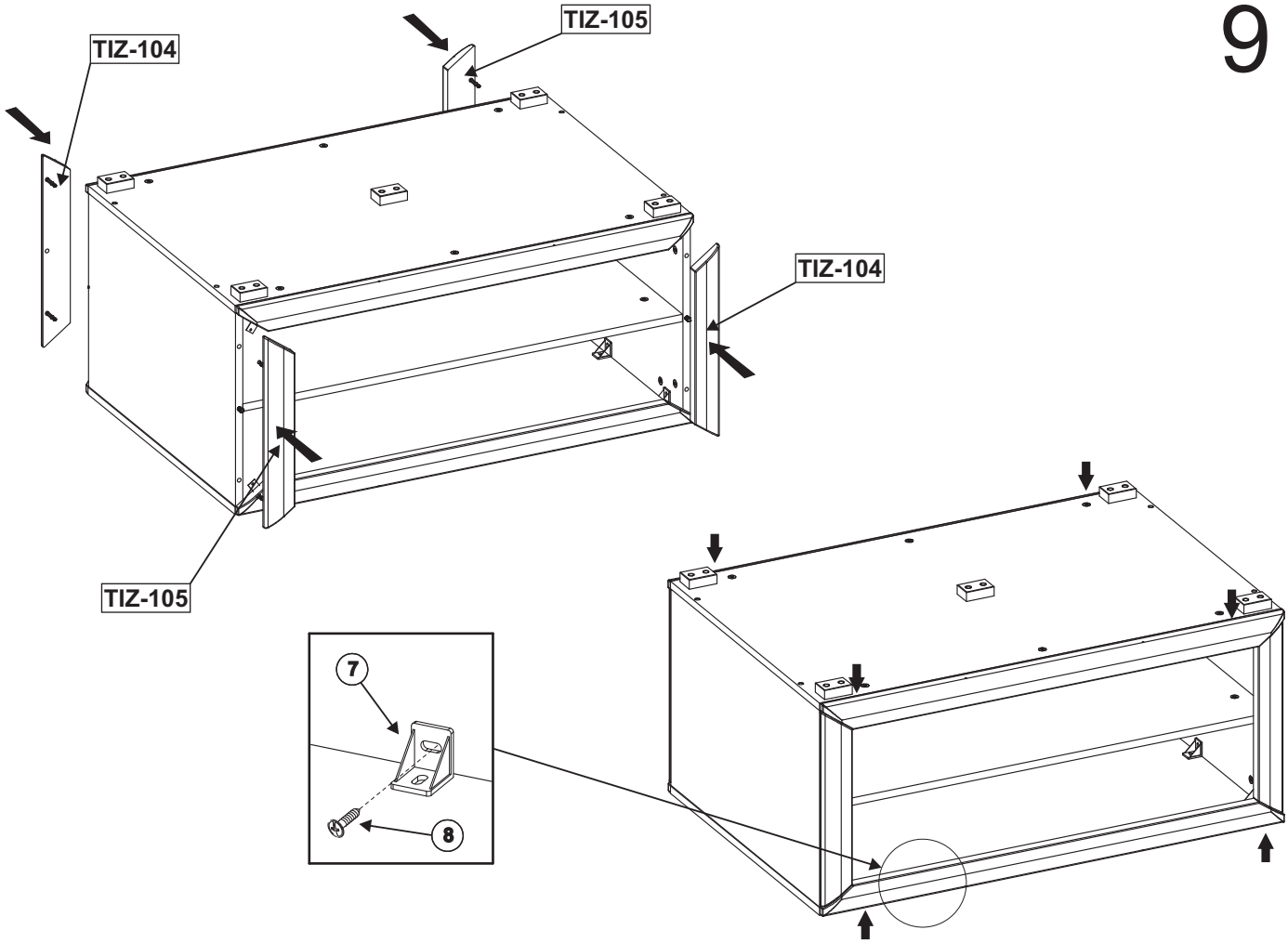

10

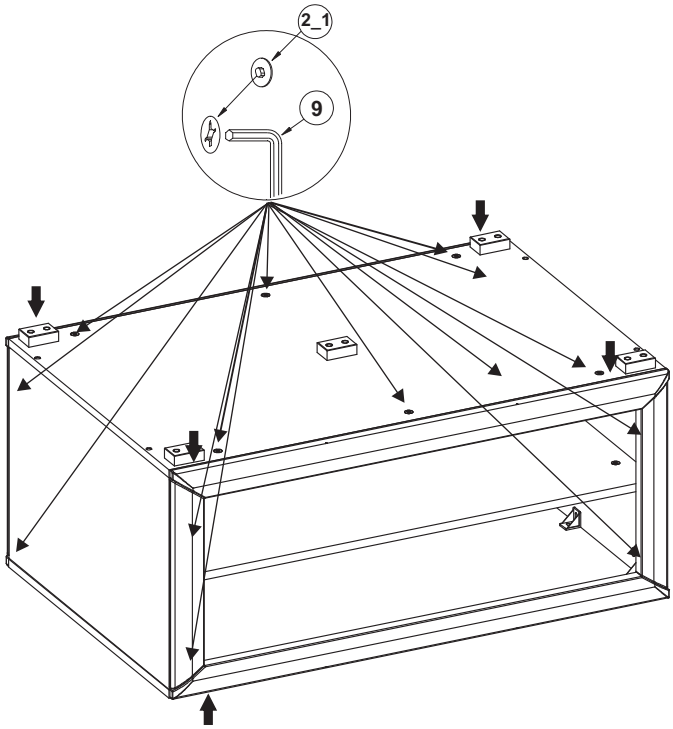

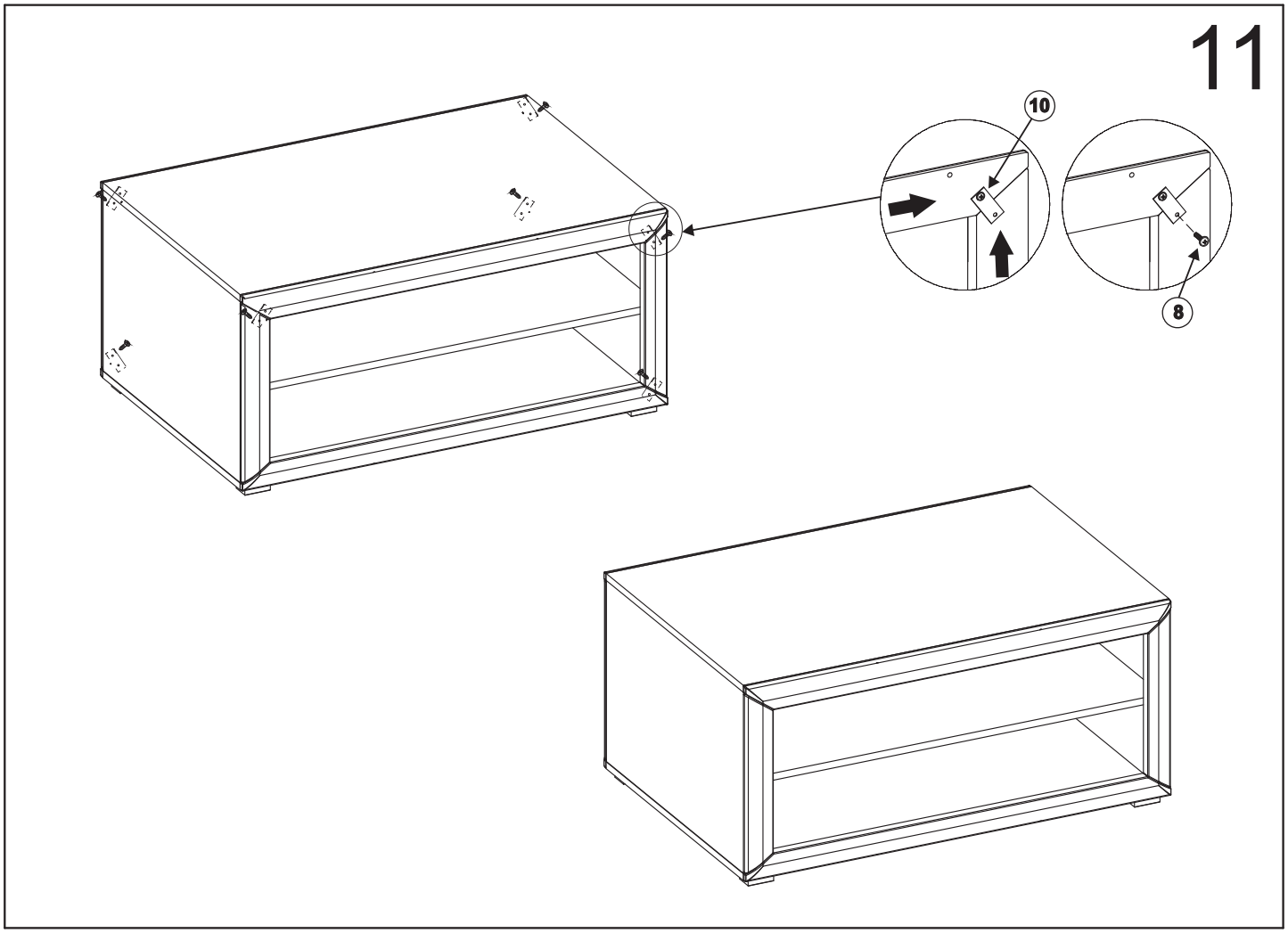
11
10
8