07840011/01
ANASTASIA



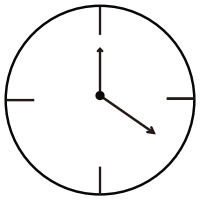

XXXLutz KG
Roemerstrasse 39
AT-4600 Wels, Austria
E -mail: info@moemax.at `

BESSAGI
GARDEN

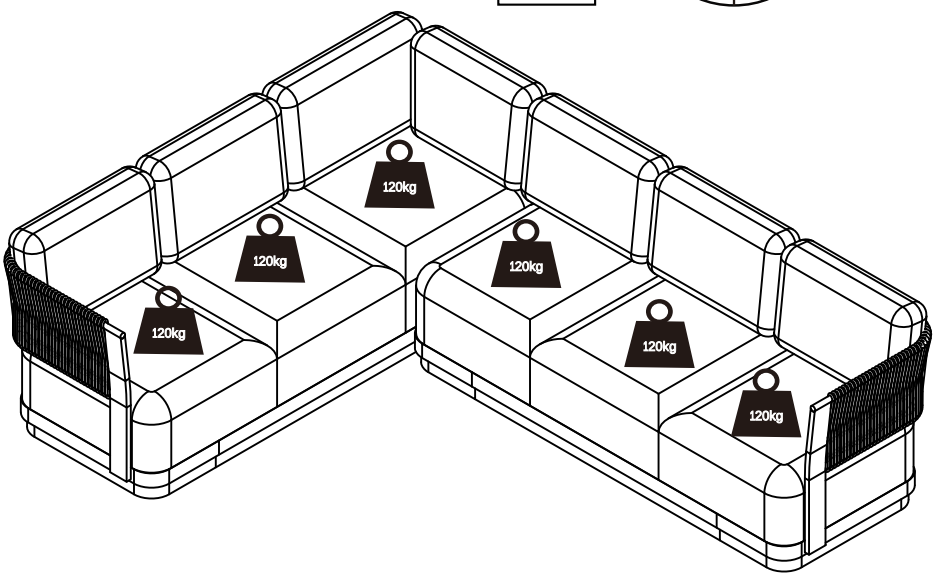





Part no.	Parts List	Qty(Pcs)	Part no.	Parts List	Qty(Pcs)	Part no.	Parts List	Qty(Pcs)
A	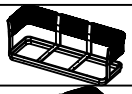	1	E	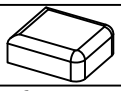	1	I	 M6*35	6
B	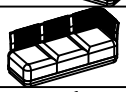	1	F		1	J		6
C		1	G		5	K		1
D	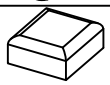	1	H		1			

Step 1.

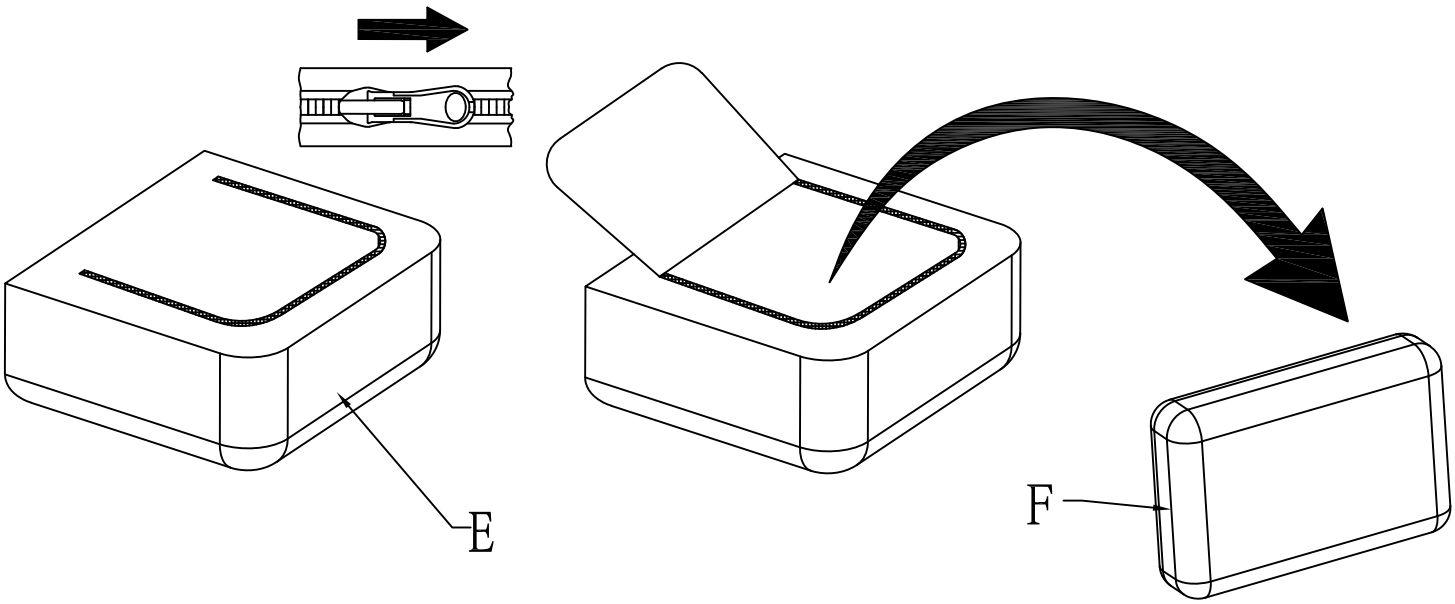

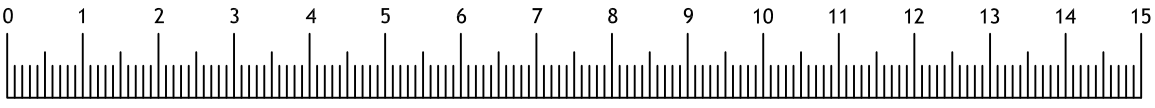

07840011/01
ANASTASIA

XXXLutz KG
Roemerstrasse 39
AT-4600 Wels, Austria
E -mail: info@moemax.at `

BESSAGI
GARDEN

Step 2.

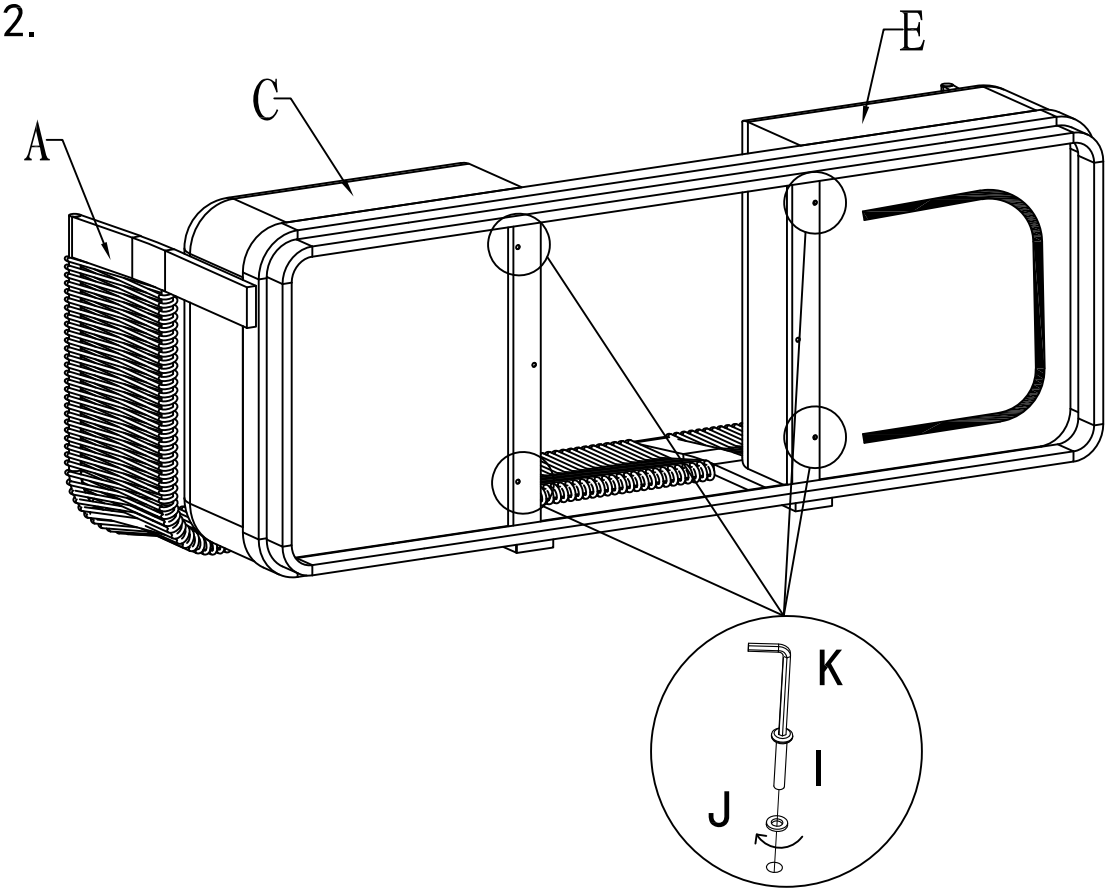

Step 3.

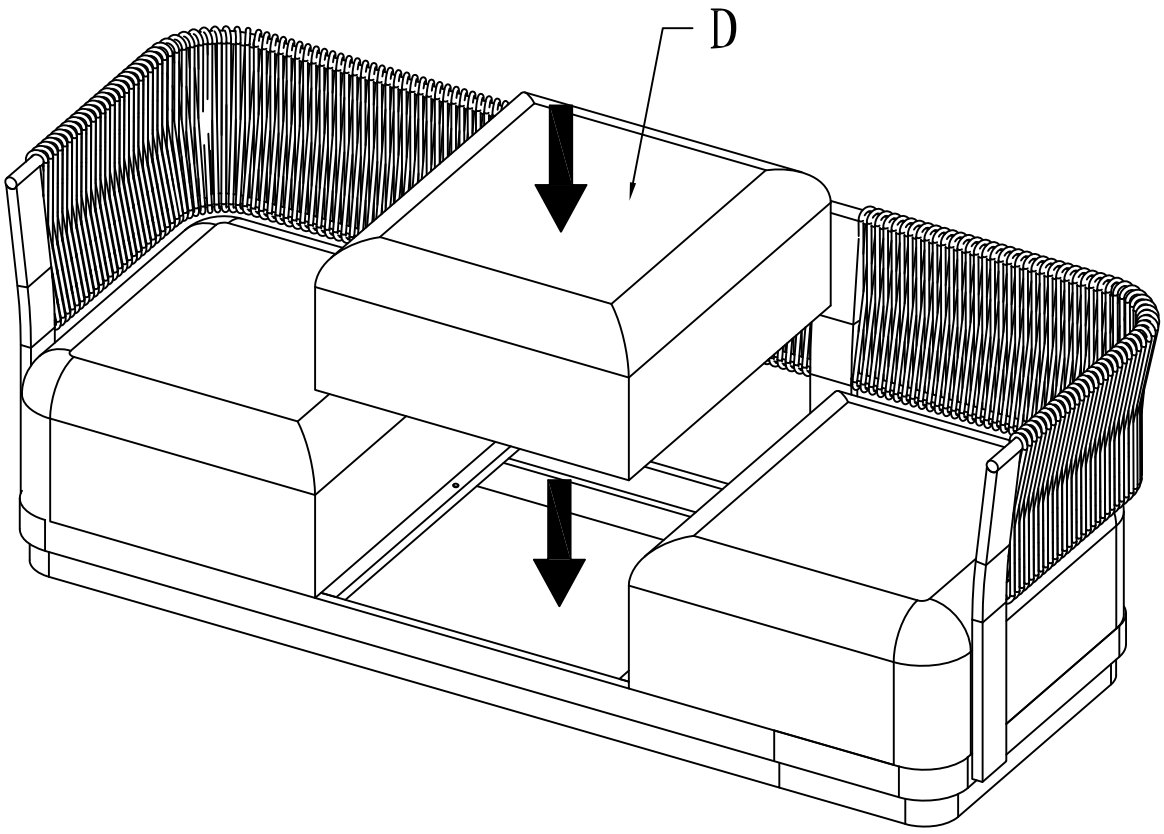

07840011/01
ANASTASIA

XXXLutz KG
Roemerstrasse 39
AT-4600 Wels, Austria
E -mail: info@moemax.at `

BESSAGI
GARDEN

Step 4.

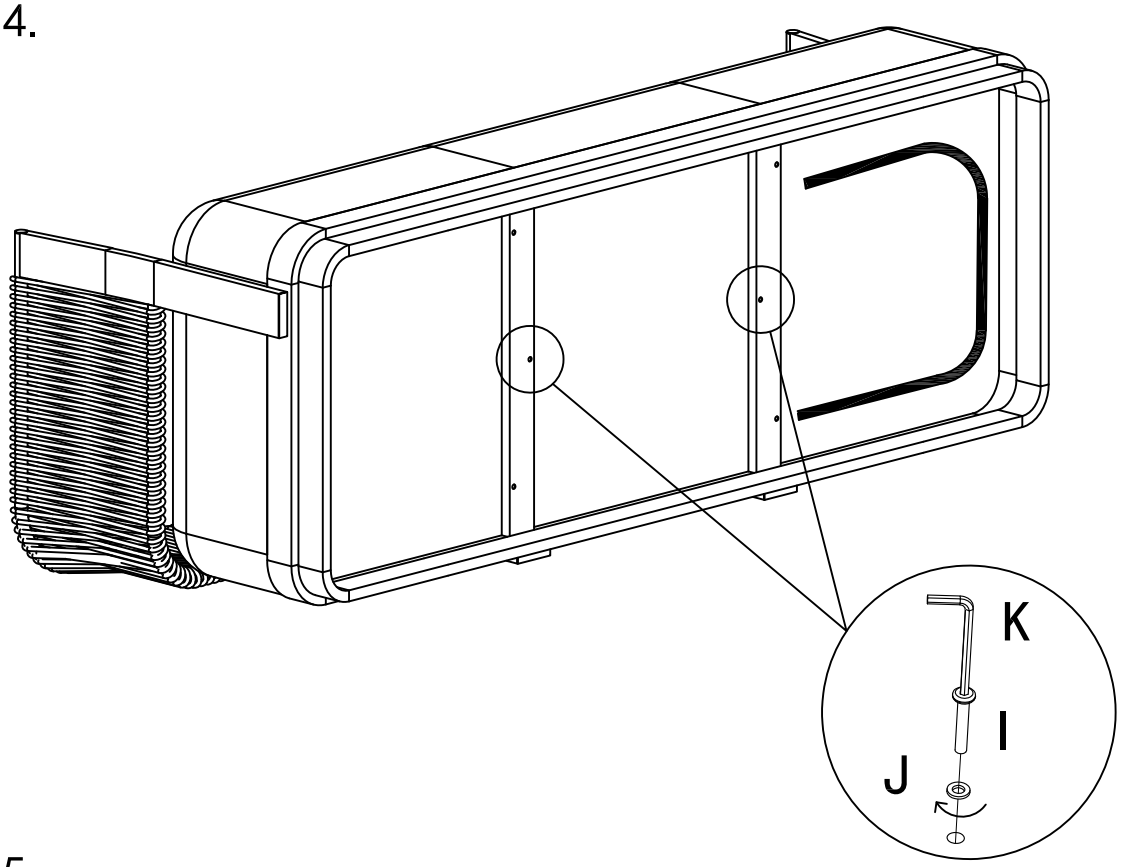

Step 5.

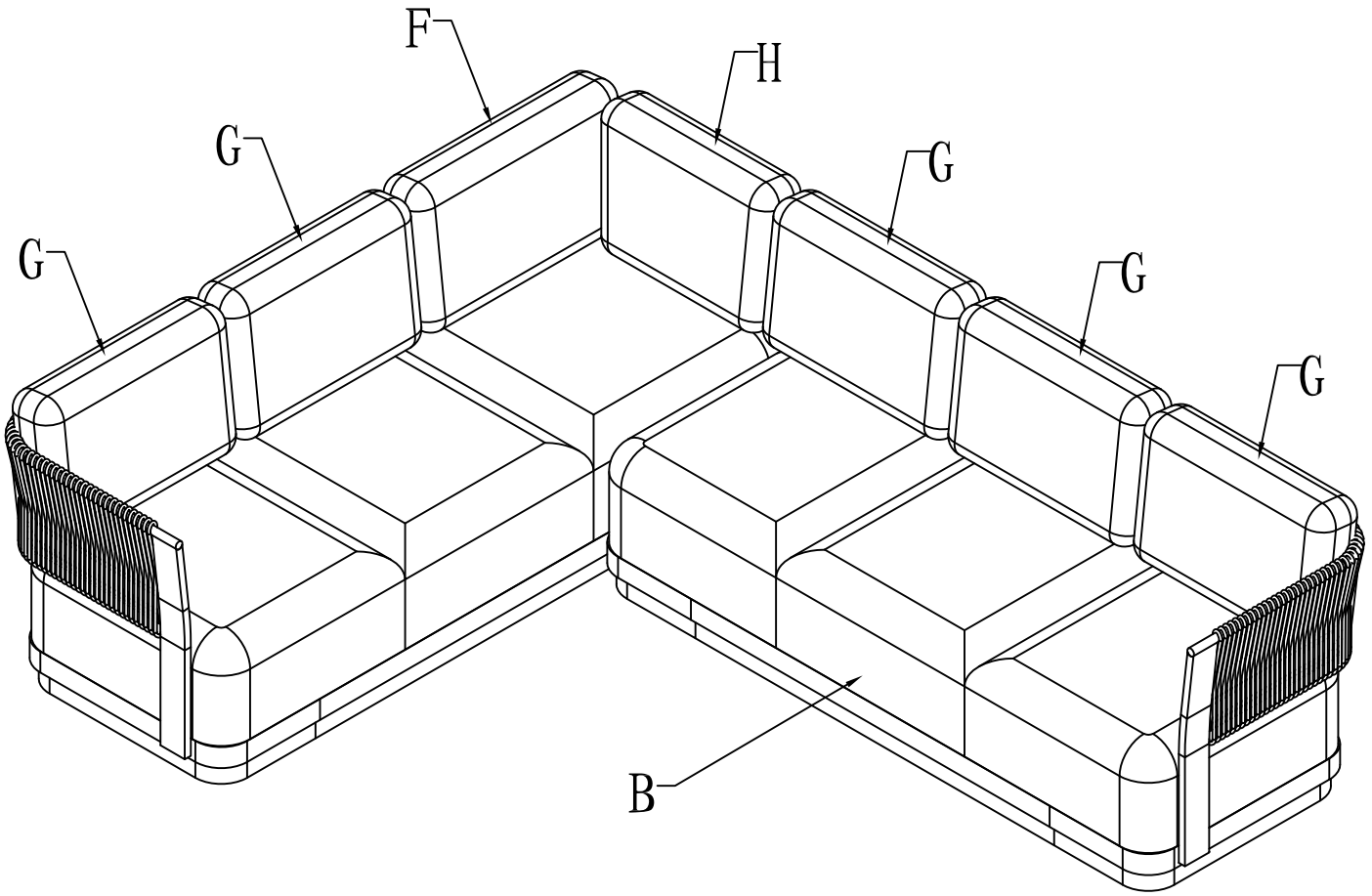

07840011/01
ANASTASIA

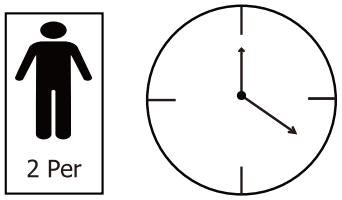

XXXLutz KG
Roemerstrasse 39
AT-4600 Wels, Austria
E -mail: info@moemax.at `

BESSAGI
GARDEN

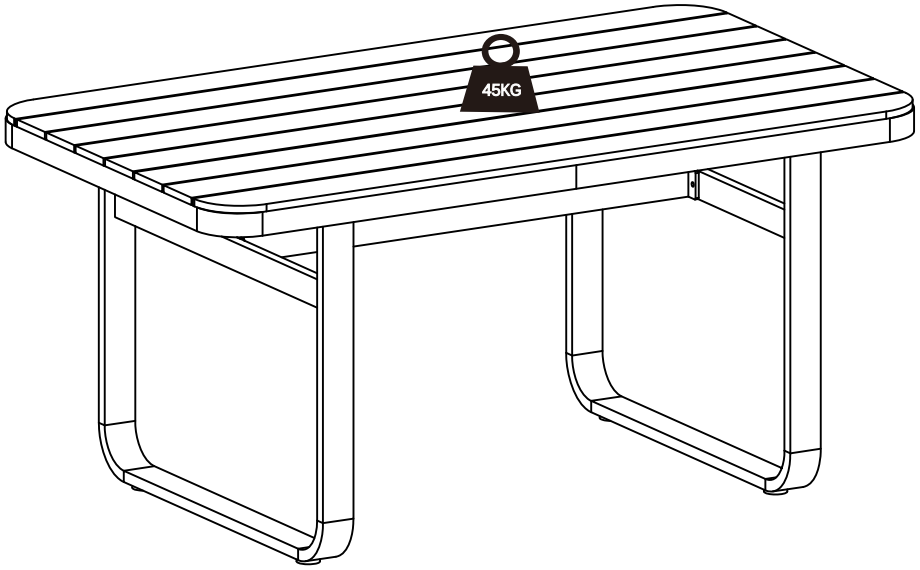

Part no.	Parts List	Qty(Pcs)
A		1
B	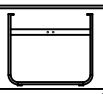	2
C		1
D	 M6*20	8
E	 M6*30	8
F		16
G		1

Step 1.

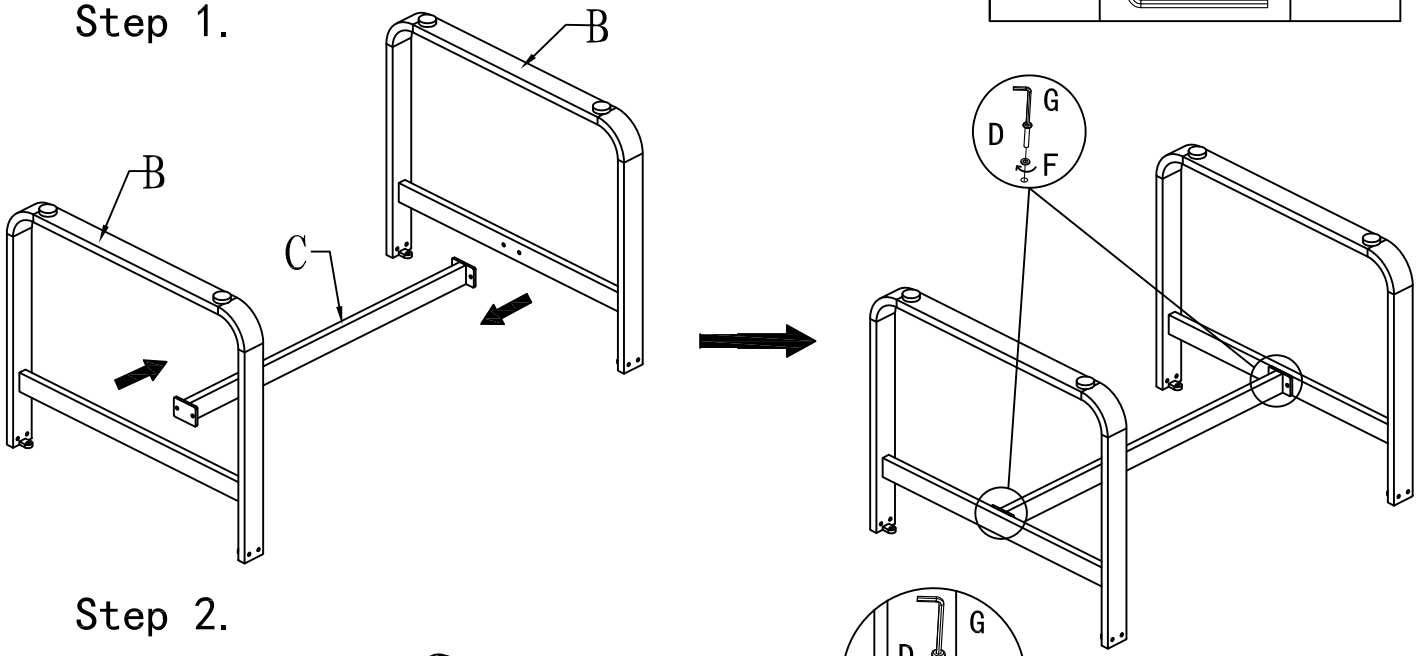

Step 2.

