0001R0005/01
CARLOS

BDSK Handels GmbH & Co. KG
Mergentheimer Straße 59
DE-97084 Würzburg
Germany

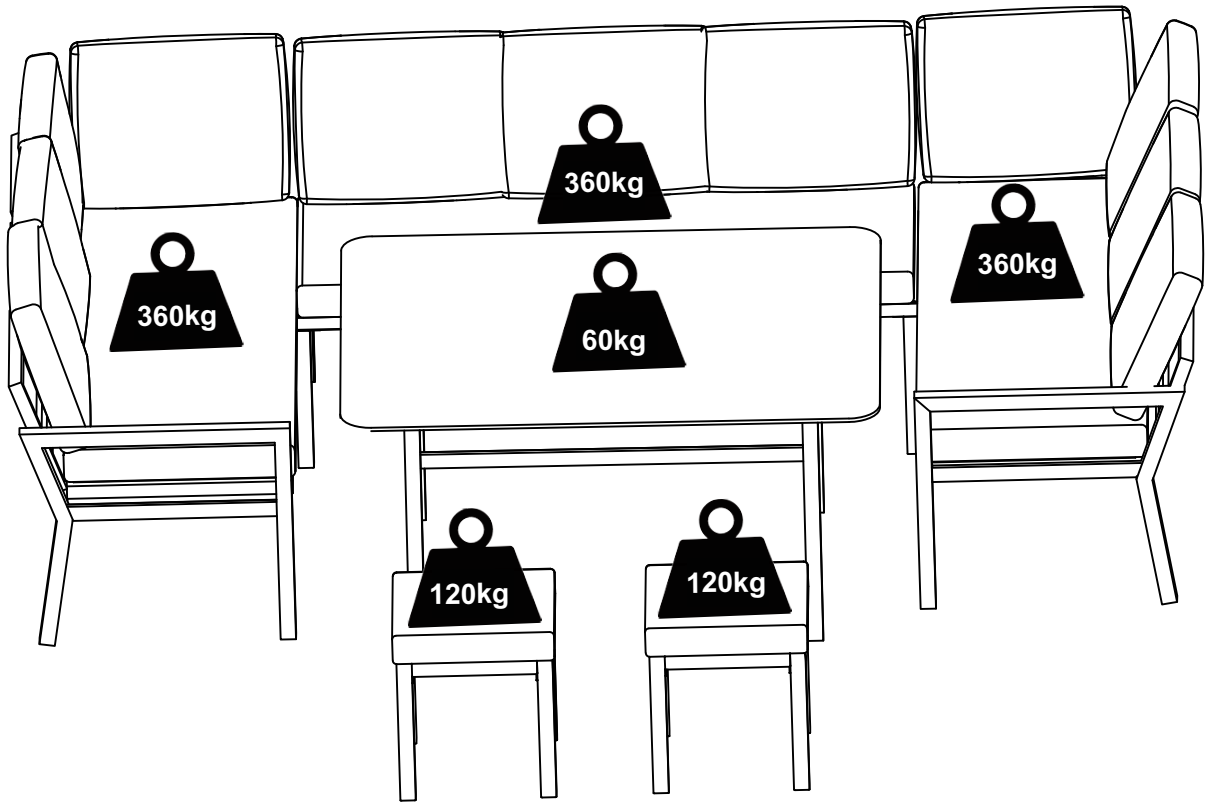

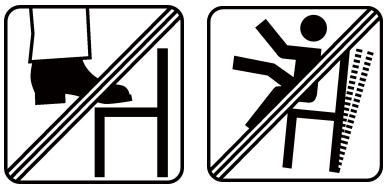

A X1 	B X2 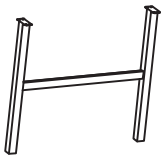	C X1 
D X2 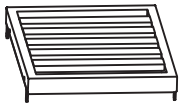	E X4 	F X1 
G X4 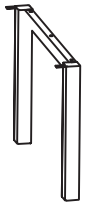	H X1 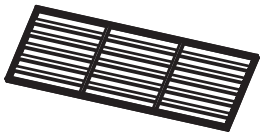	I X11 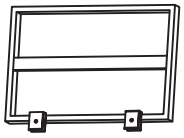
J X1 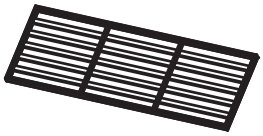	K X3 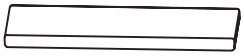	L X 9 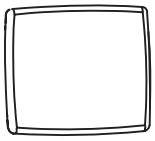
M X2 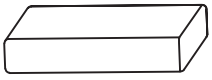	N X2 	P X1 
O X1 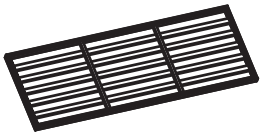	Q X 2 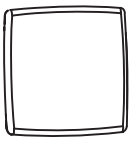	W x 4 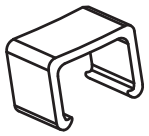



①X22  M6*10	②X44  M6*15	③X8  M6*30
④X6  M6*35	⑤X12  M6*50	⑥X92  M6
⑦X1 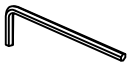	⑧X6  M6	⑨X6 



A	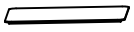	X1
B	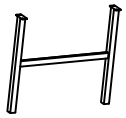	X2
C		X1
②	 M6*10	X24
⑥	 M6	X24
⑦		X1

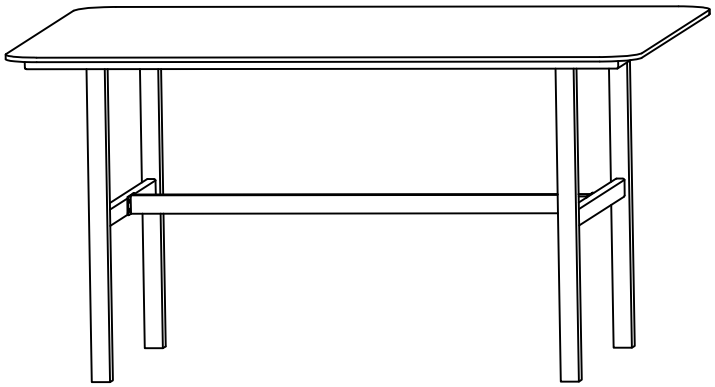



1

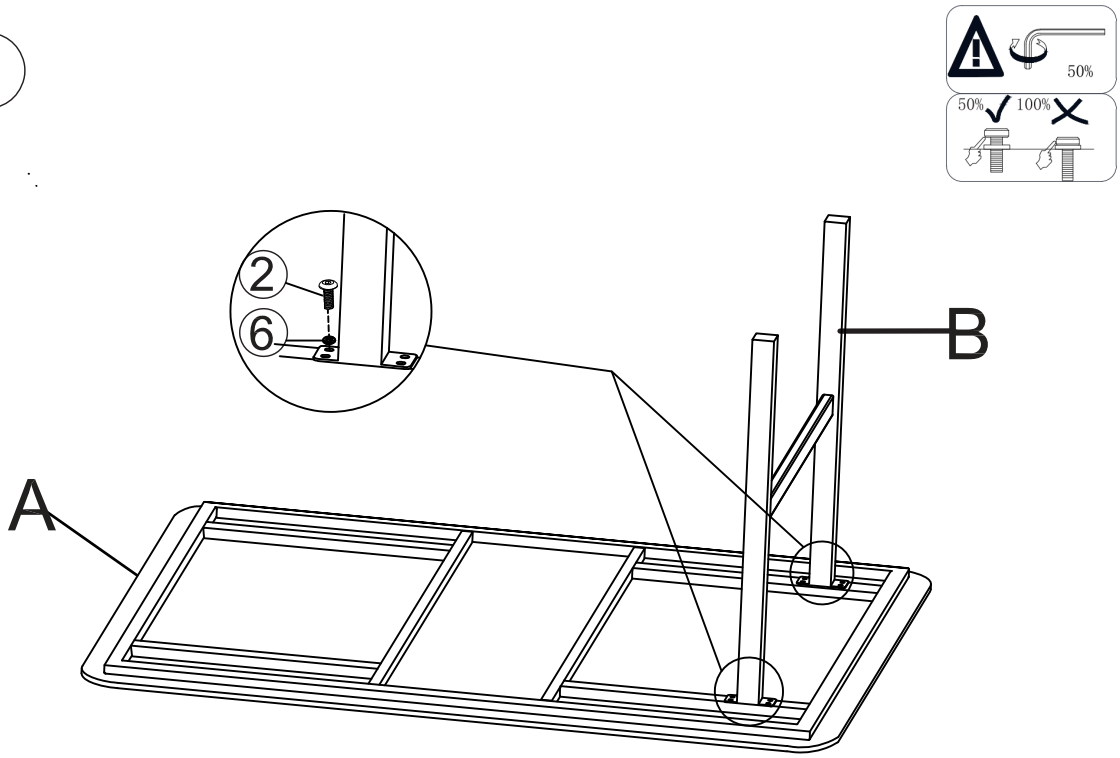

2

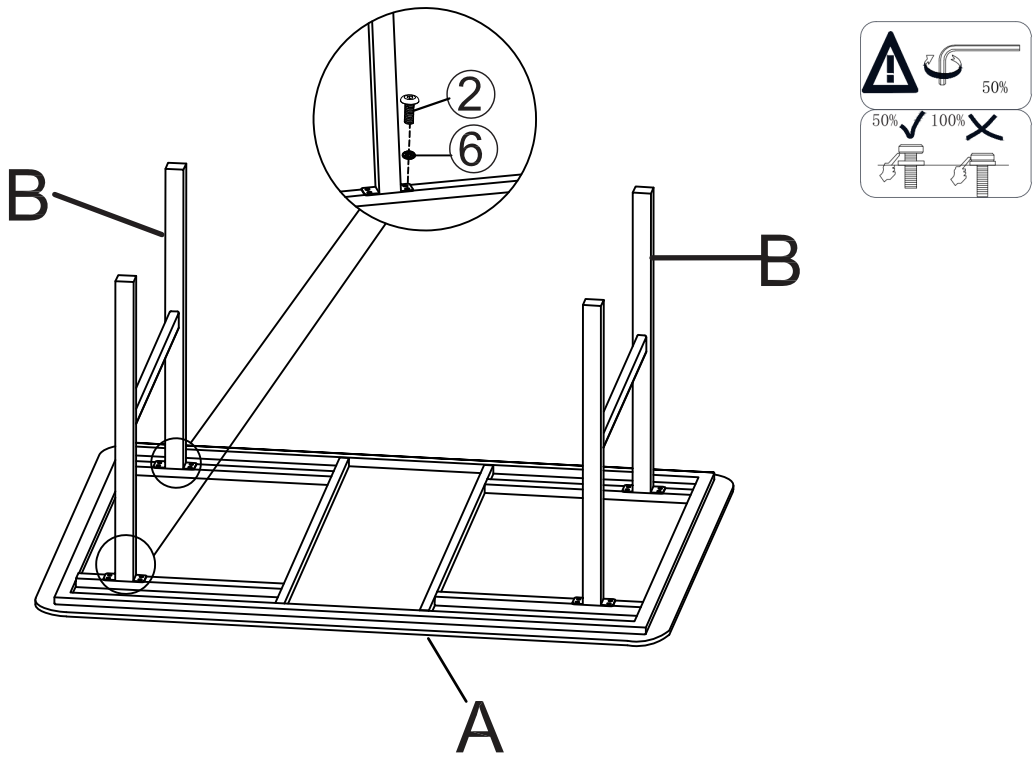



3

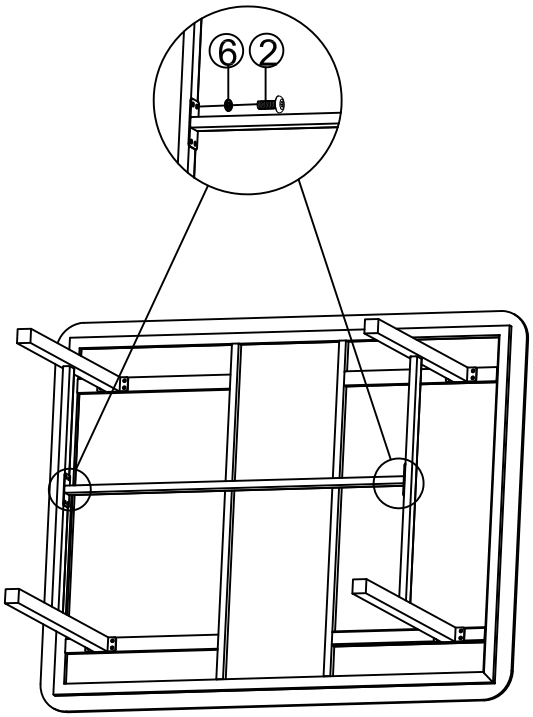

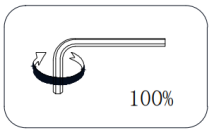

4

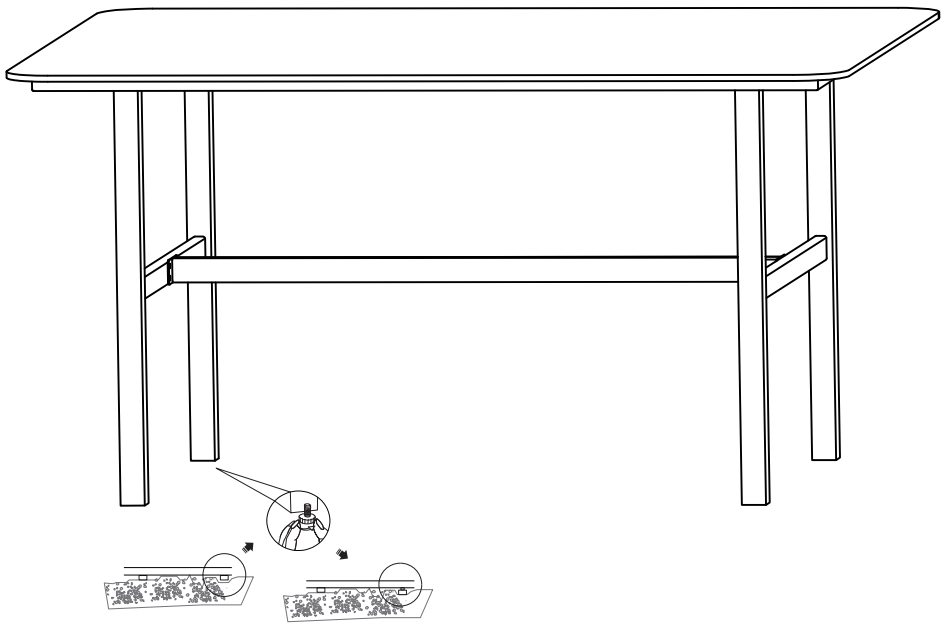

0 1 2 3 4 5 6 7 8 9 10 11 12 13 14 15

D		X2
E		X2
M	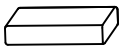	X2
②	 M6*15	X8
③	 M6*30	X8
⑥	 M6	X16
⑦		X1

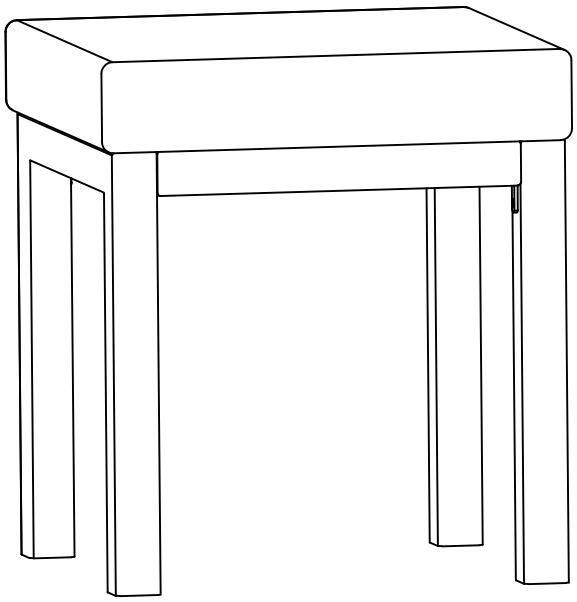

x2



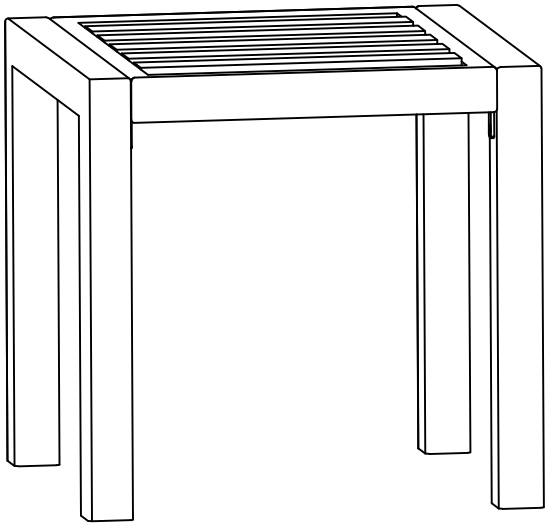

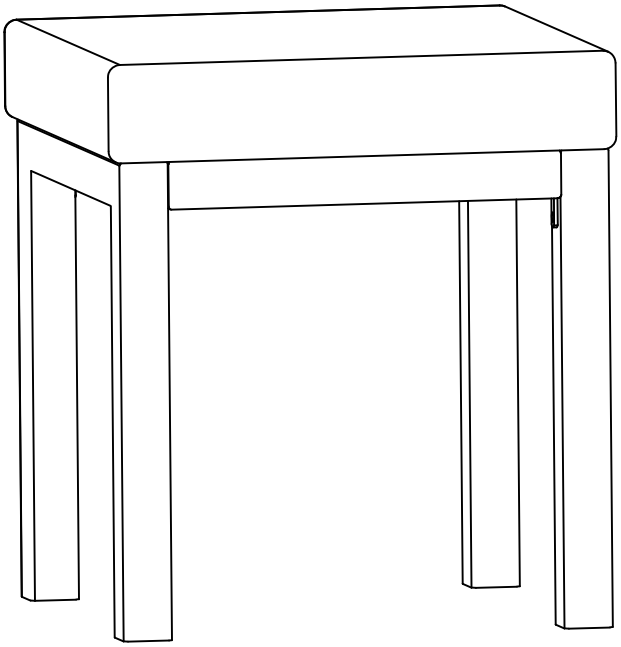


0 1 2 3 4 5 6 7 8 9 10 11 12 13 14 15

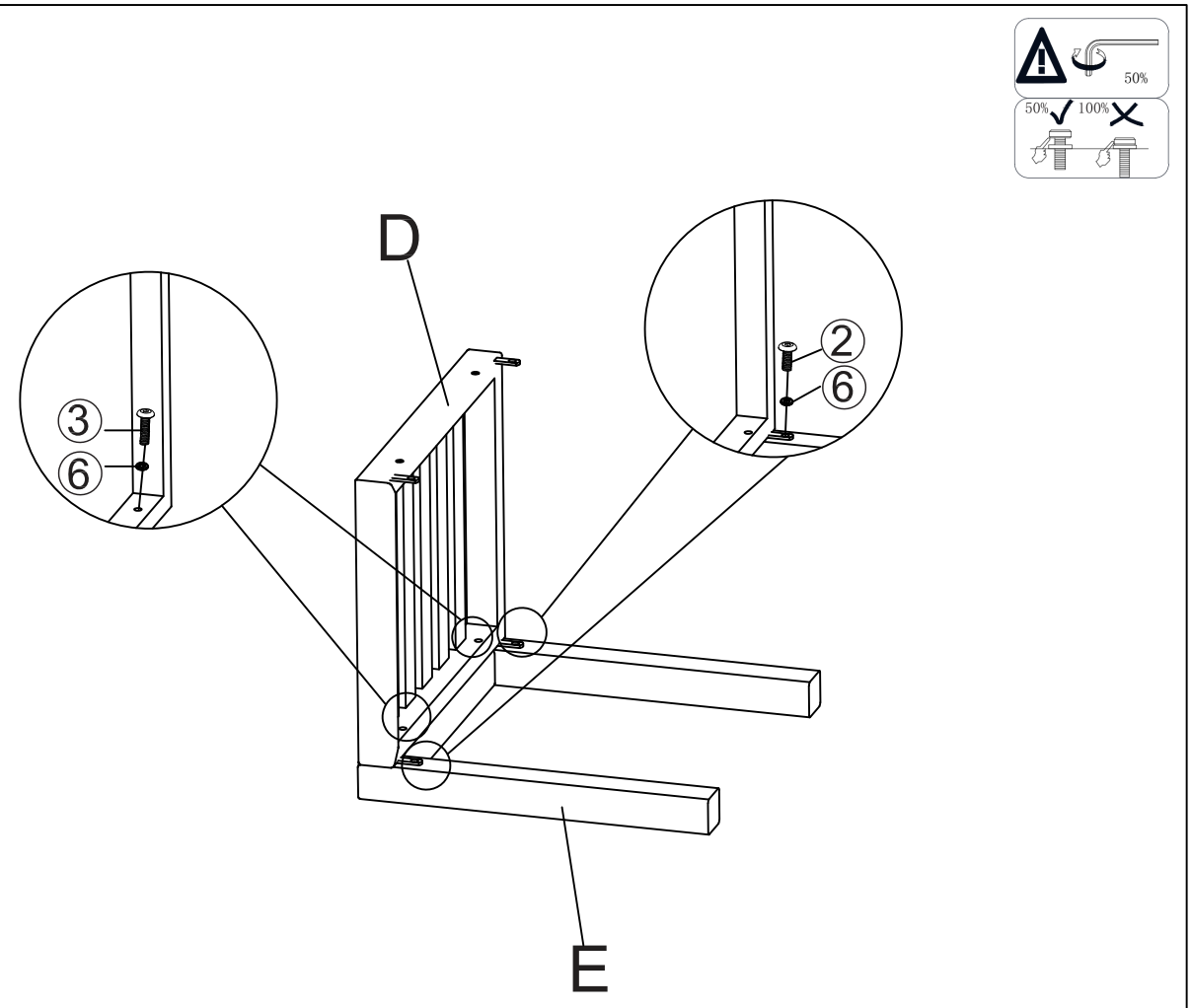
50%
50%
100%
D
2
6
3
6
E

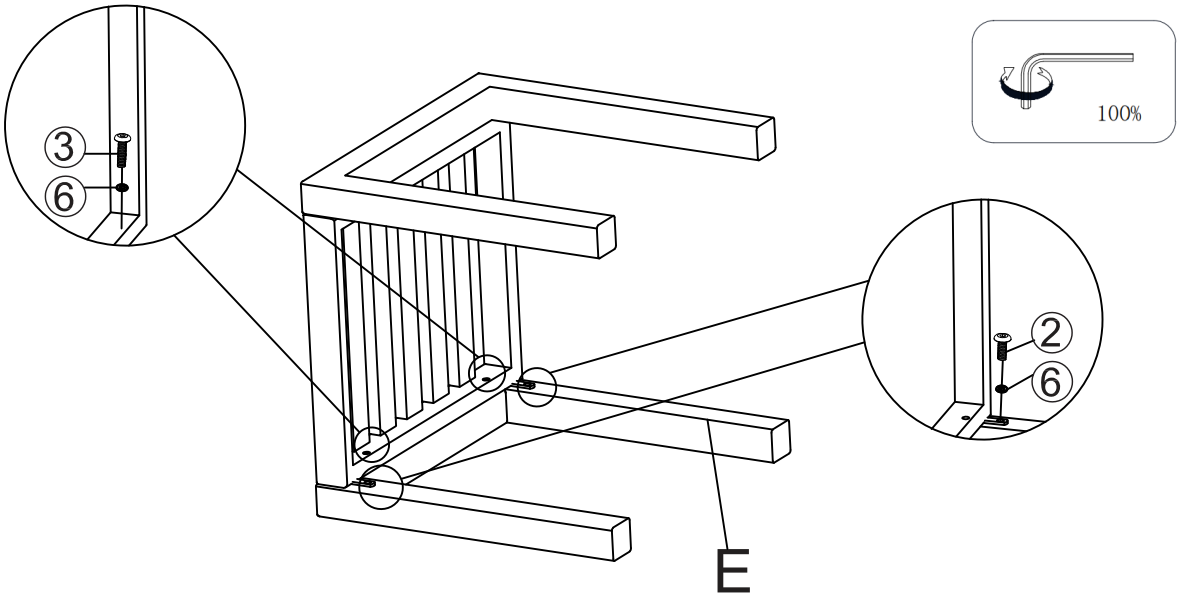
100%
3
6
2
6
E


0 1 2 3 4 5 6 7 8 9 10 11 12 13 14 15

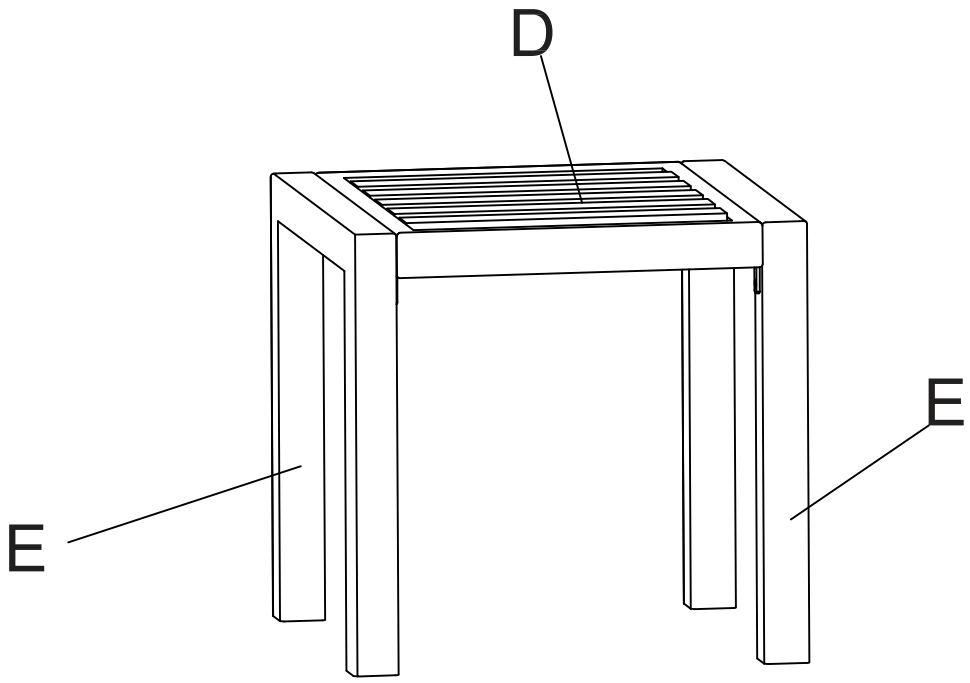
D
E
E

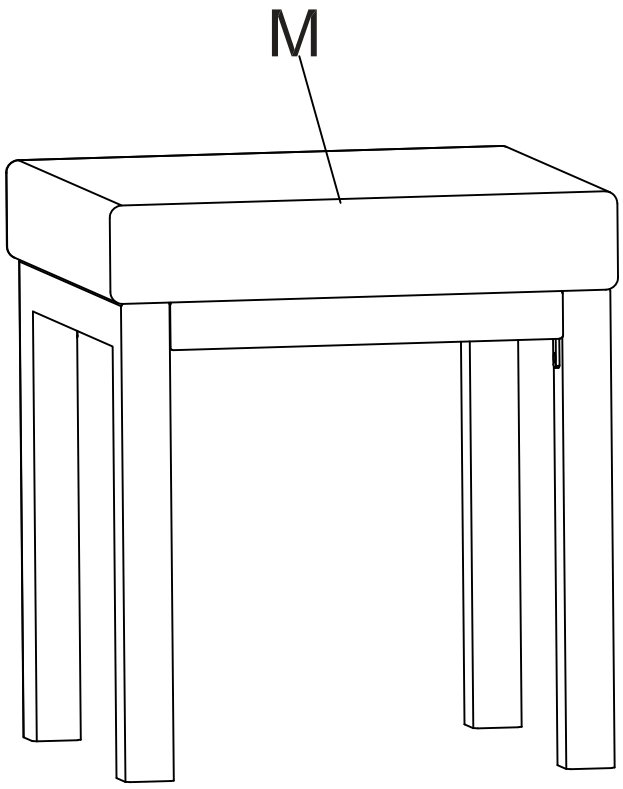
M


0 1 2 3 4 5 6 7 8 9 10 11 12 13 14 15

G	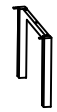	X2
J		X1
I		X3
K	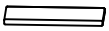	X1
L		X3
①	 M6*10	X6
②	 M6*15	X4
⑤	 M6*50	X6
⑥	 M6	X16
⑦		X1

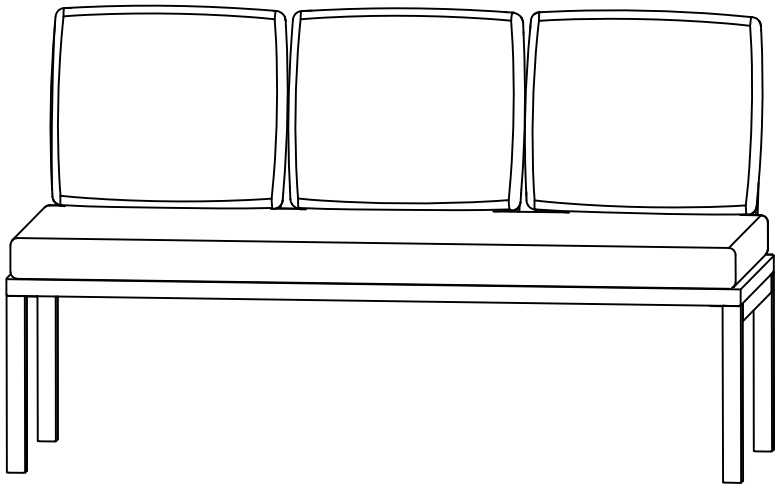

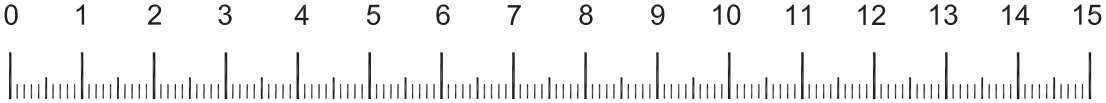

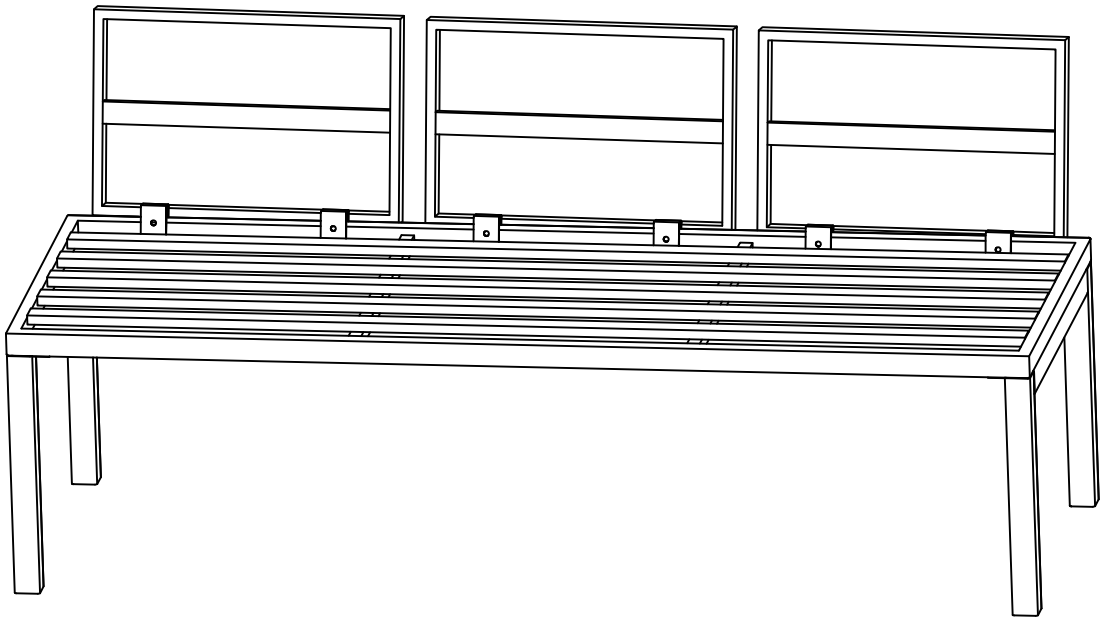

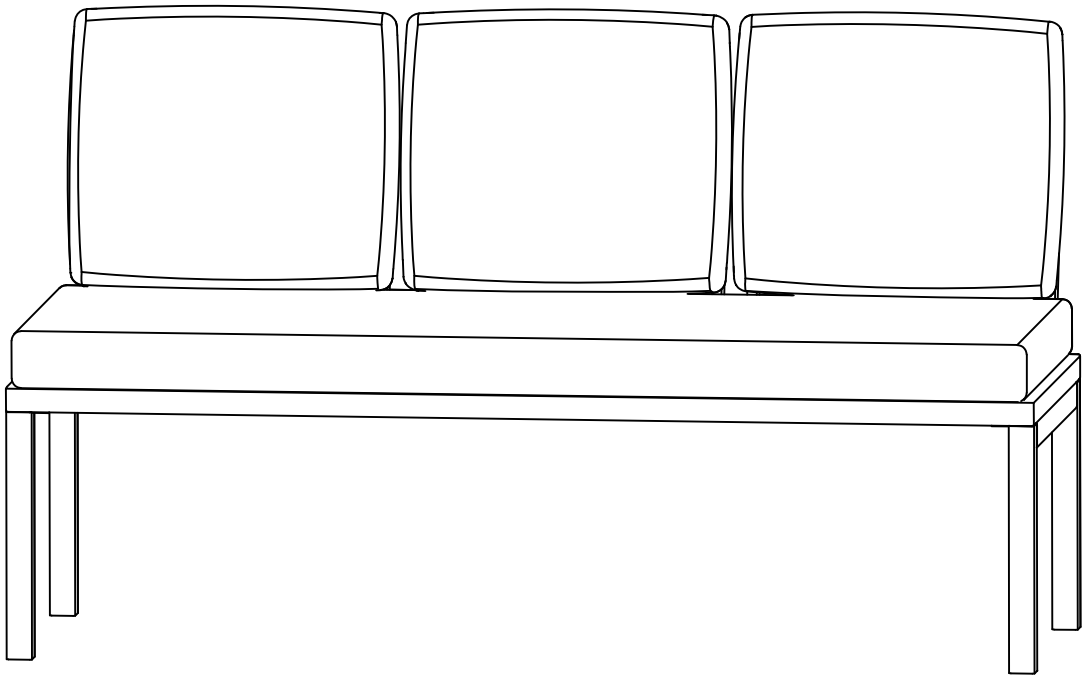

0 1 2 3 4 5 6 7 8 9 10 11 12 13 14 15

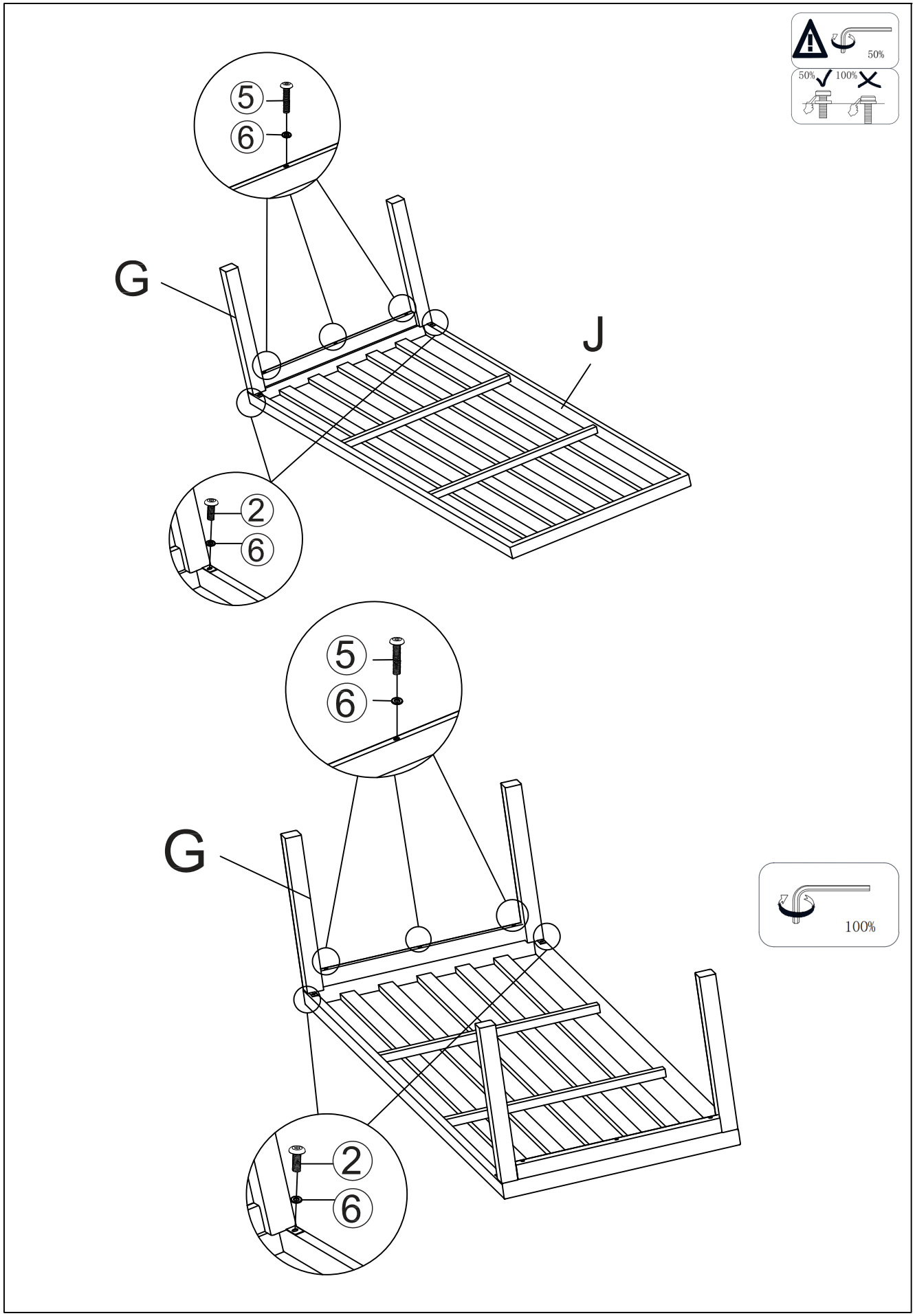
50%
50%
100%
5
6
G
J
2
6
5
6
G
100%
2
6


0 1 2 3 4 5 6 7 8 9 10 11 12 13 14 15

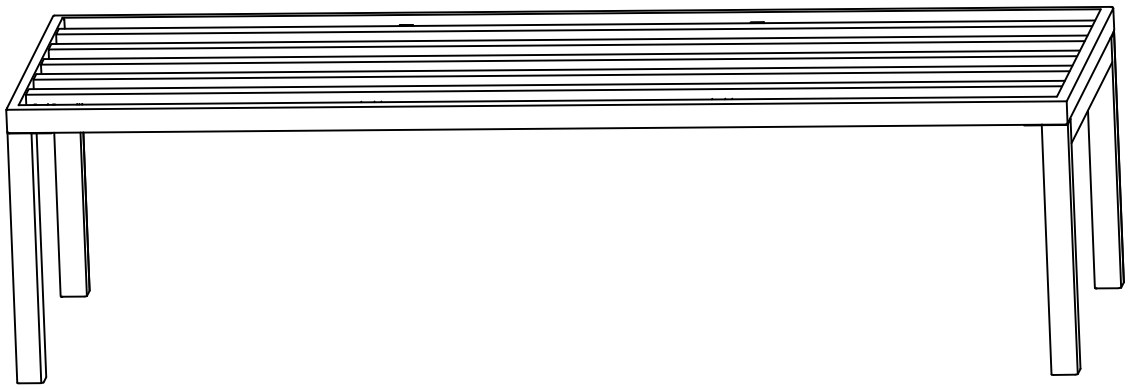

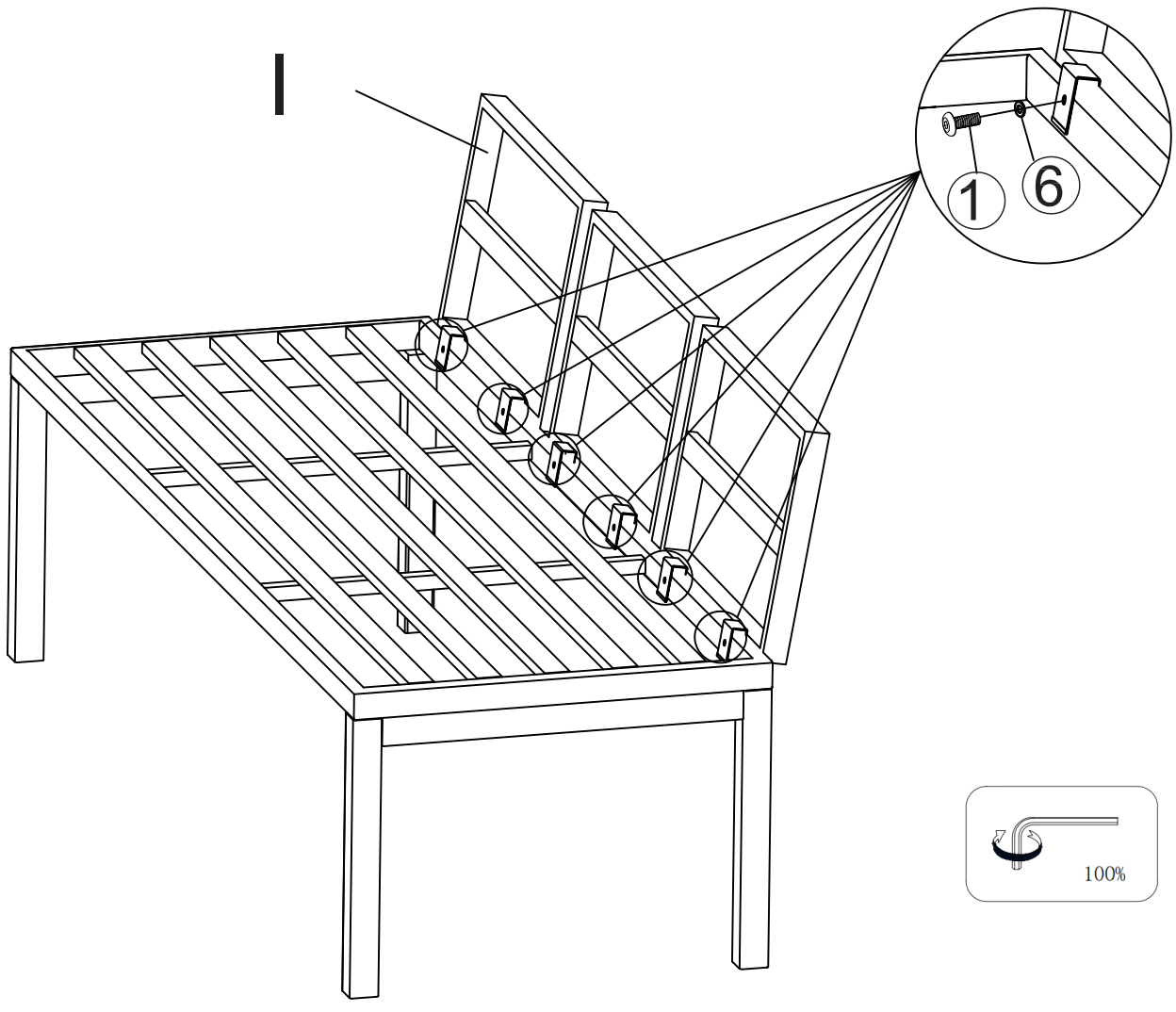

0 1 2 3 4 5 6 7 8 9 10 11 12 13 14 15

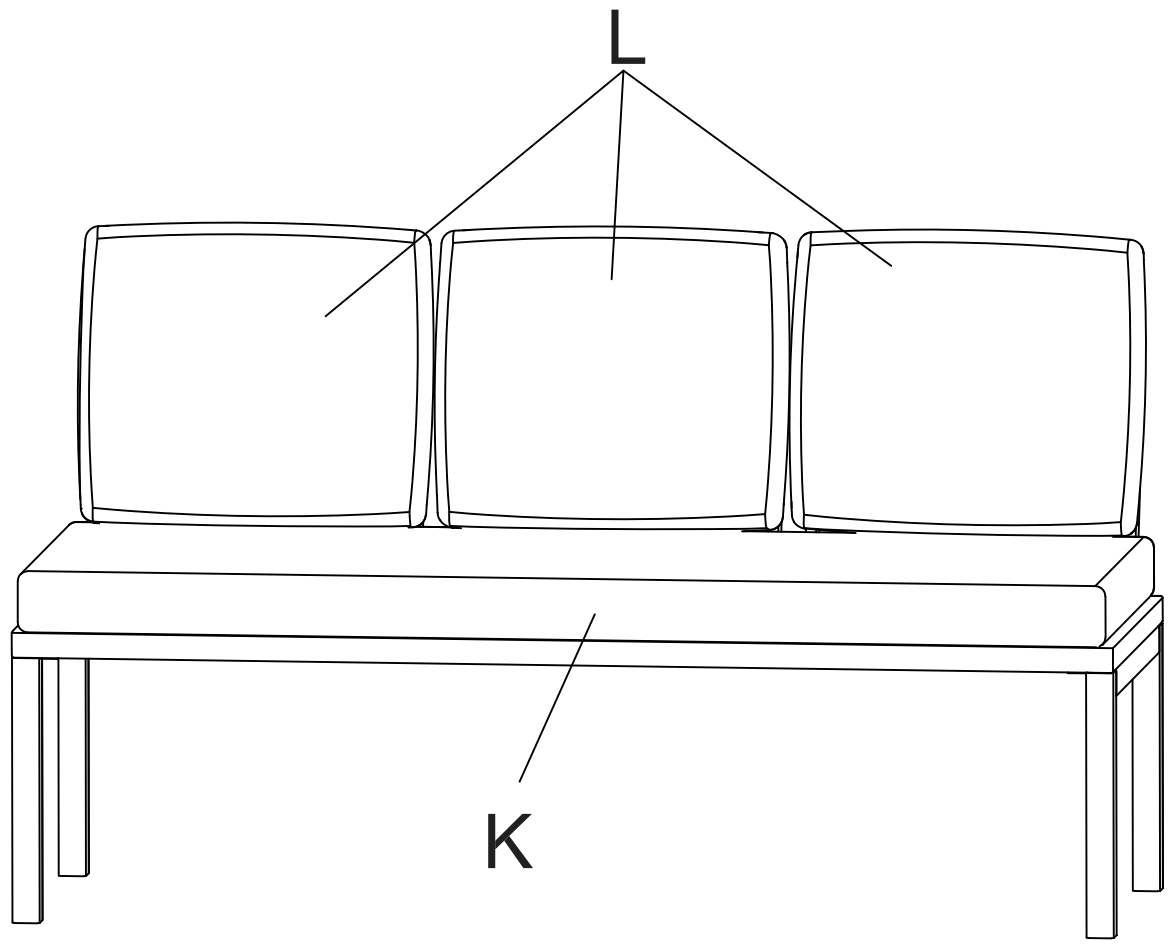
L
K


0 1 2 3 4 5 6 7 8 9 10 11 12 13 14 15

F		X1	⑨		X3
G		X1	Q		X 1
H		X1			
I		X4			
K	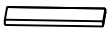	X1			
L		X 3			
N		X1			
①	 M6*10	X8			
②	 M6*15	X4			
④	 M6*35	X3			
⑤	 M6*50	X3			
⑥	 M6	X18			
⑧		X3			
⑦					

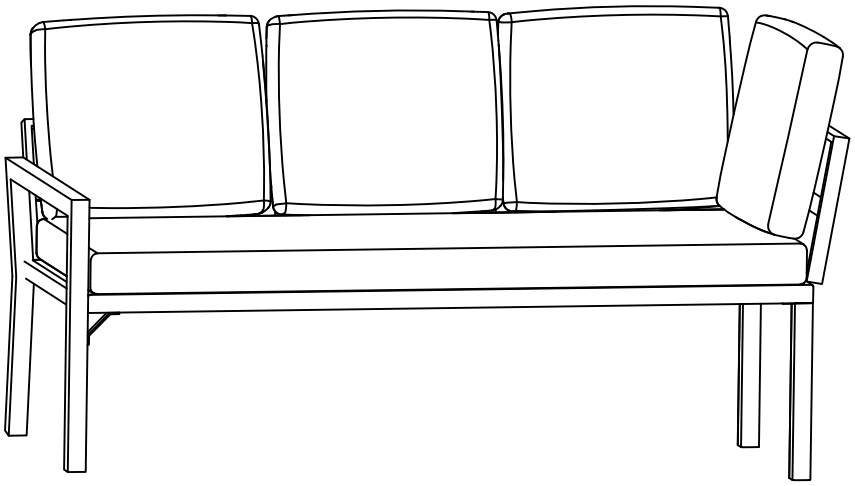



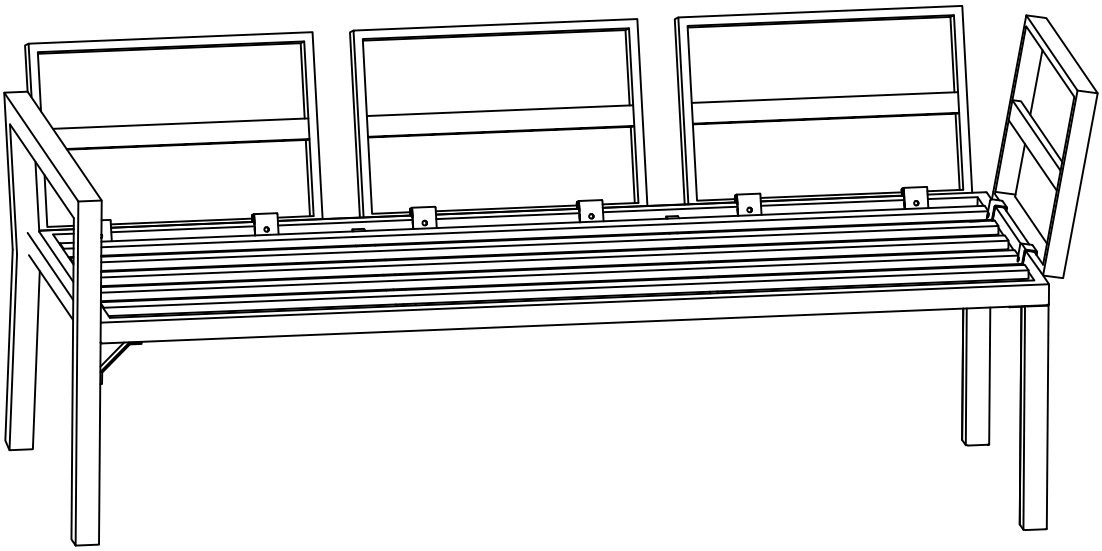

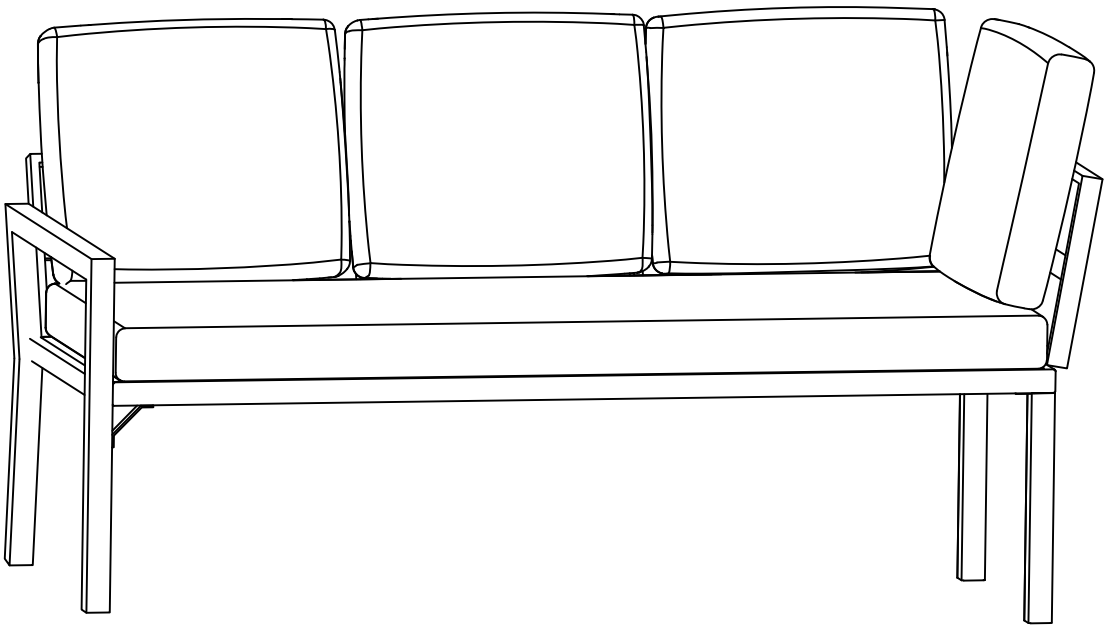

0 1 2 3 4 5 6 7 8 9 10 11 12 13 14 15

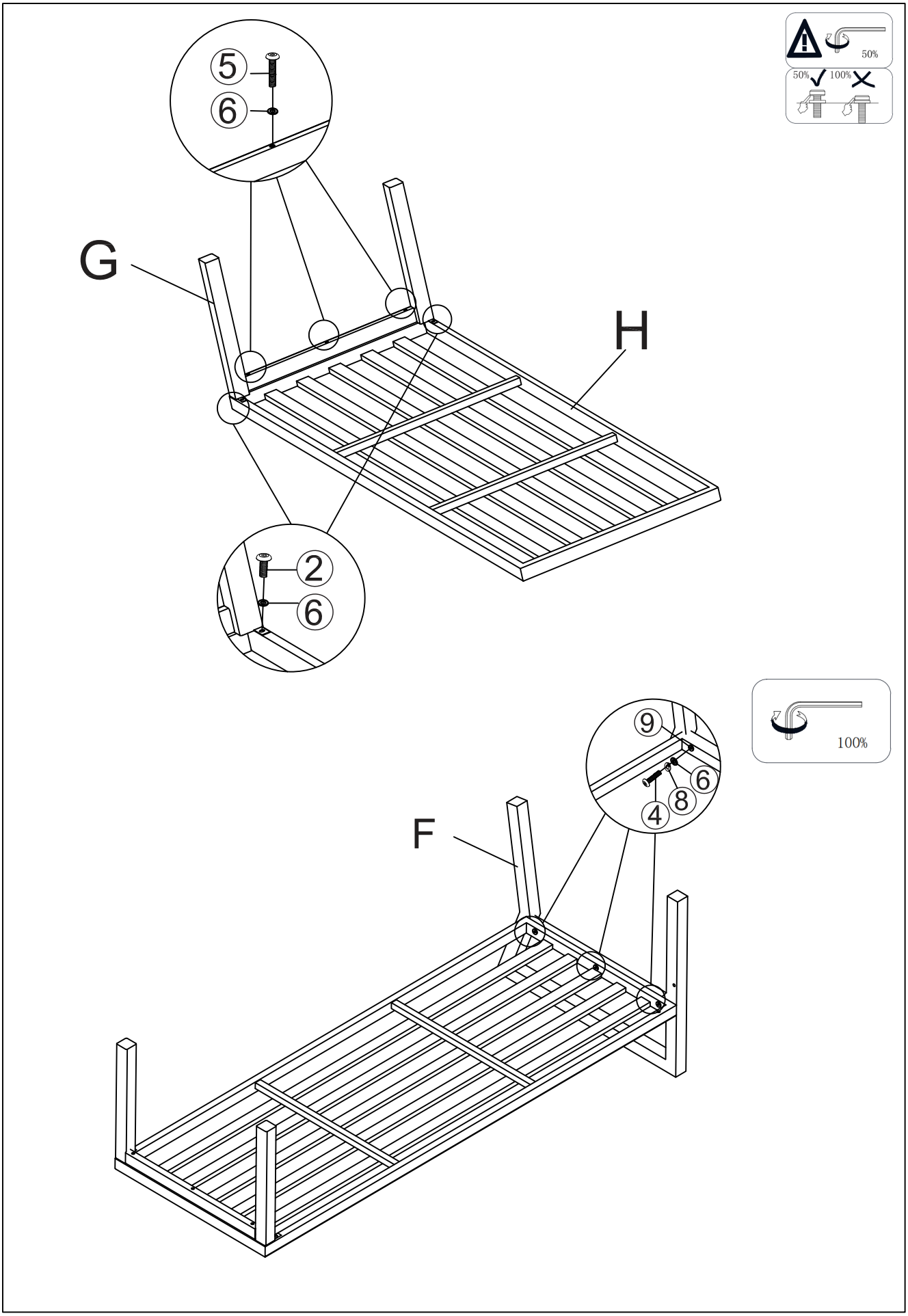

0 1 2 3 4 5 6 7 8 9 10 11 12 13 14 15

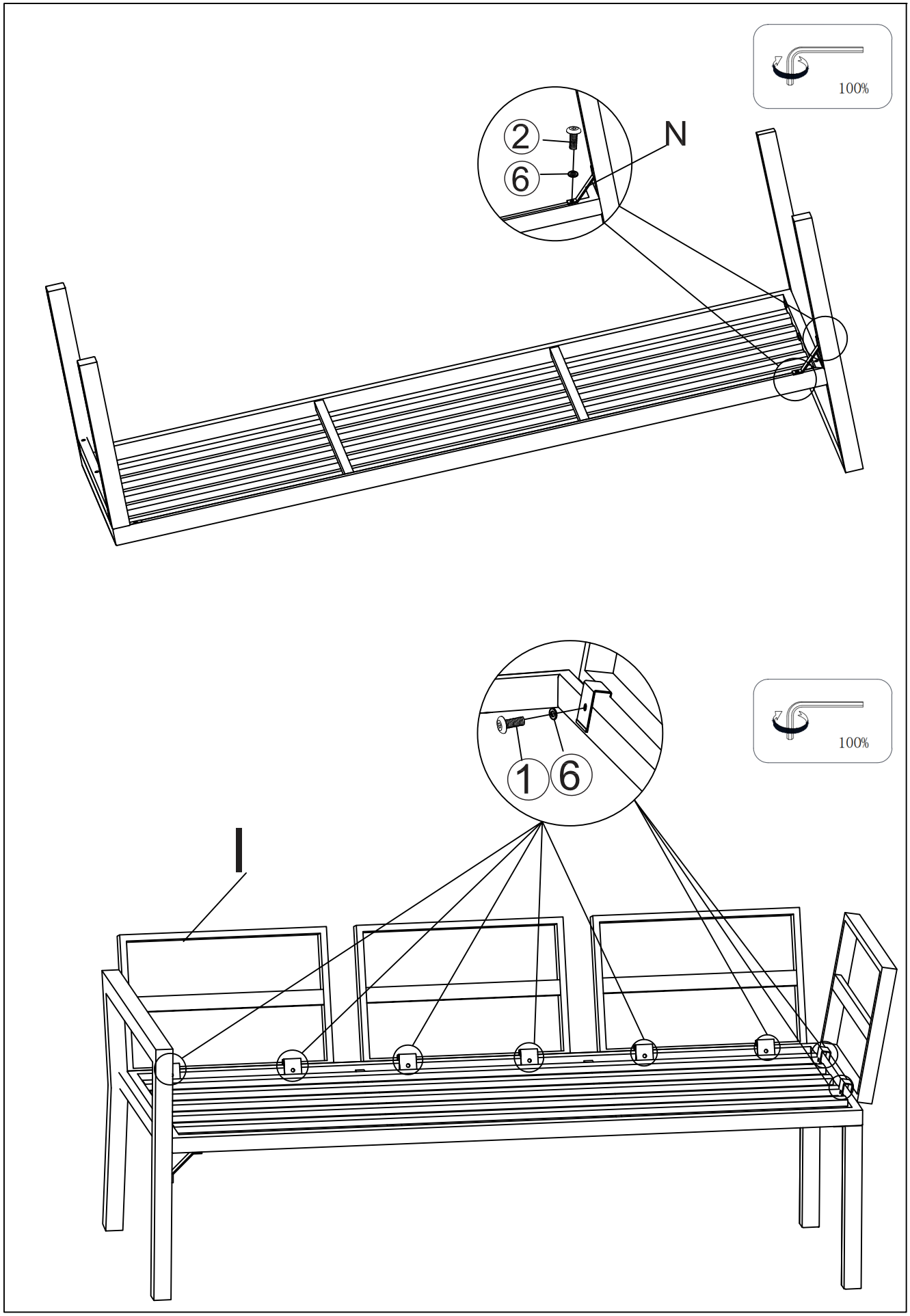

0 1 2 3 4 5 6 7 8 9 10 11 12 13 14 15

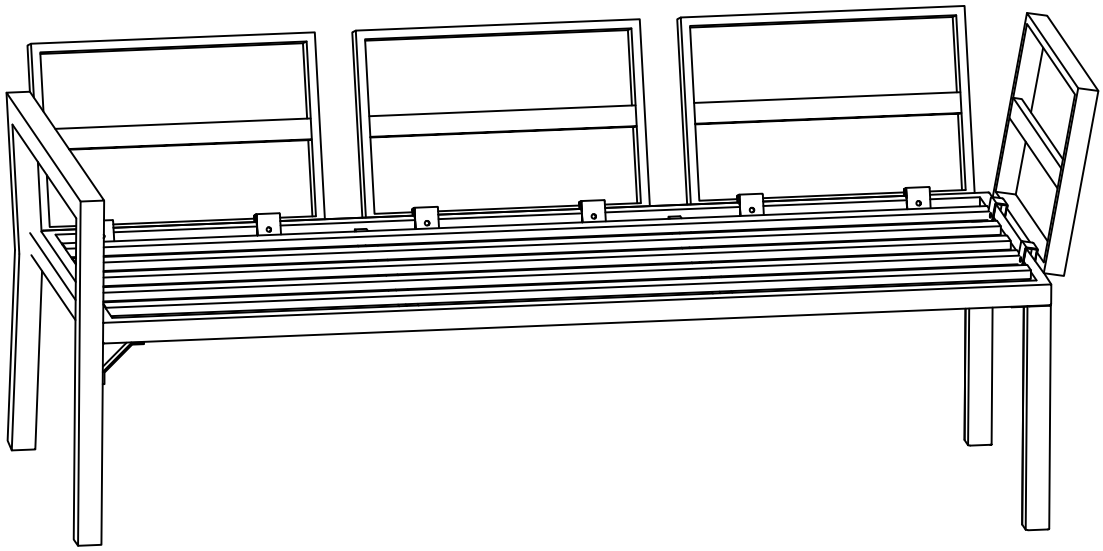

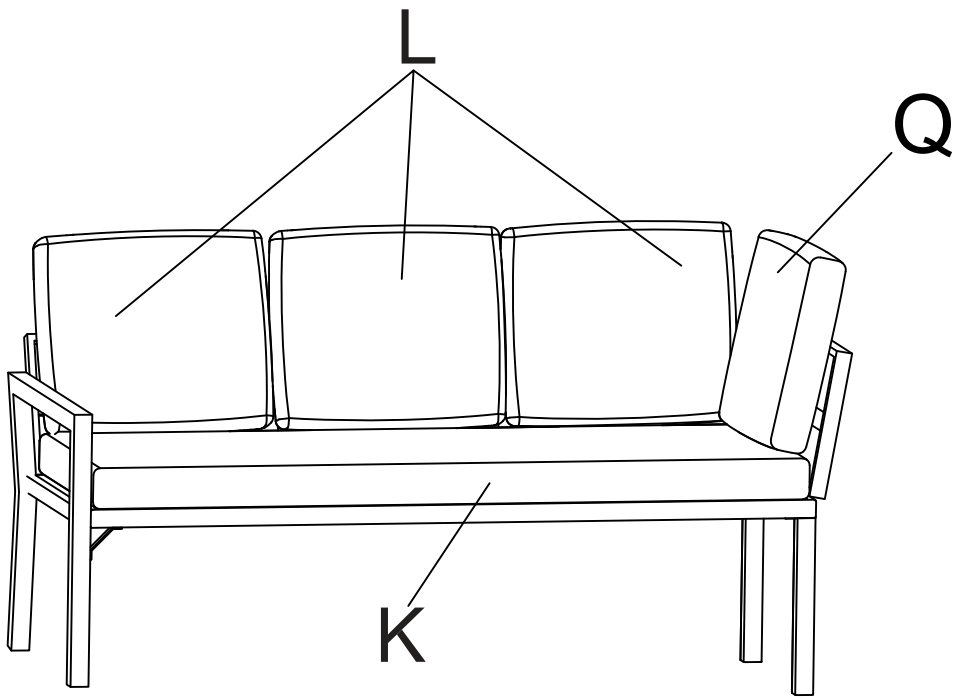
L
Q
K


0 1 2 3 4 5 6 7 8 9 10 11 12 13 14 15

P		X1	w		X4
G		X1	Q		X1
O		X1	⑨		X3
I		X4			
K	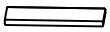	X1			
L		X3			
N		X1			
①	M6*10	X8			
②	 M6*15	X4			
④	 M6*35	X3			
⑤	 M6*50	X3			
⑥	 M6	X18			
⑧		X3			
⑦		X1			

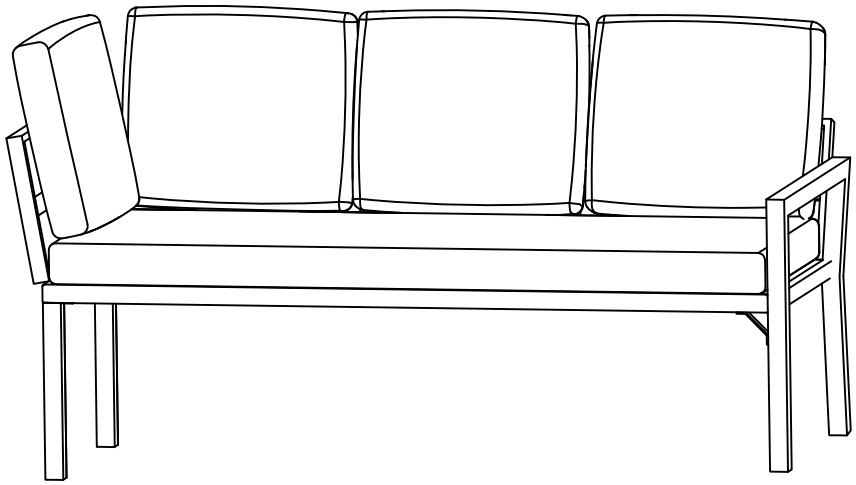



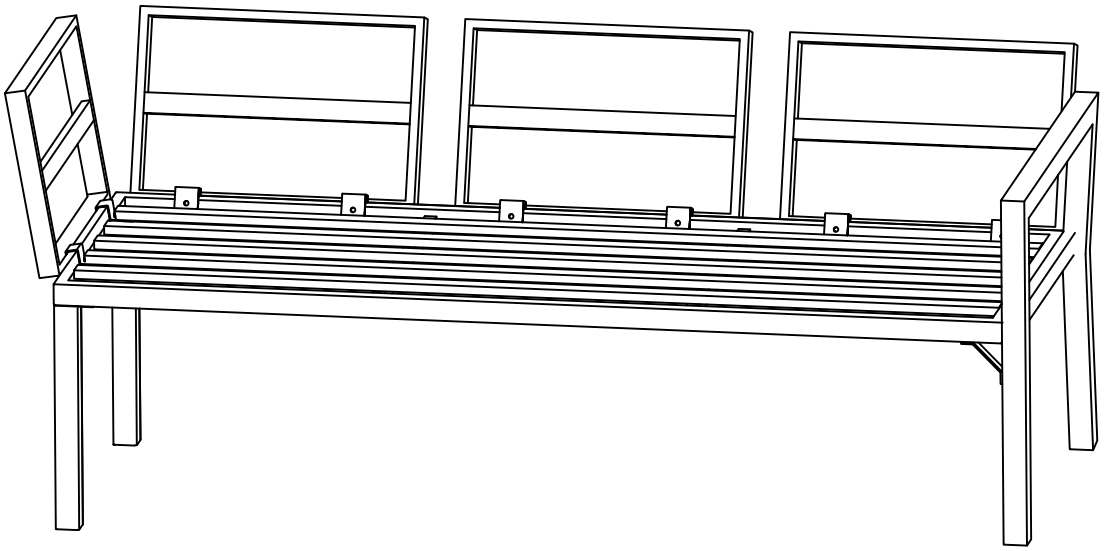

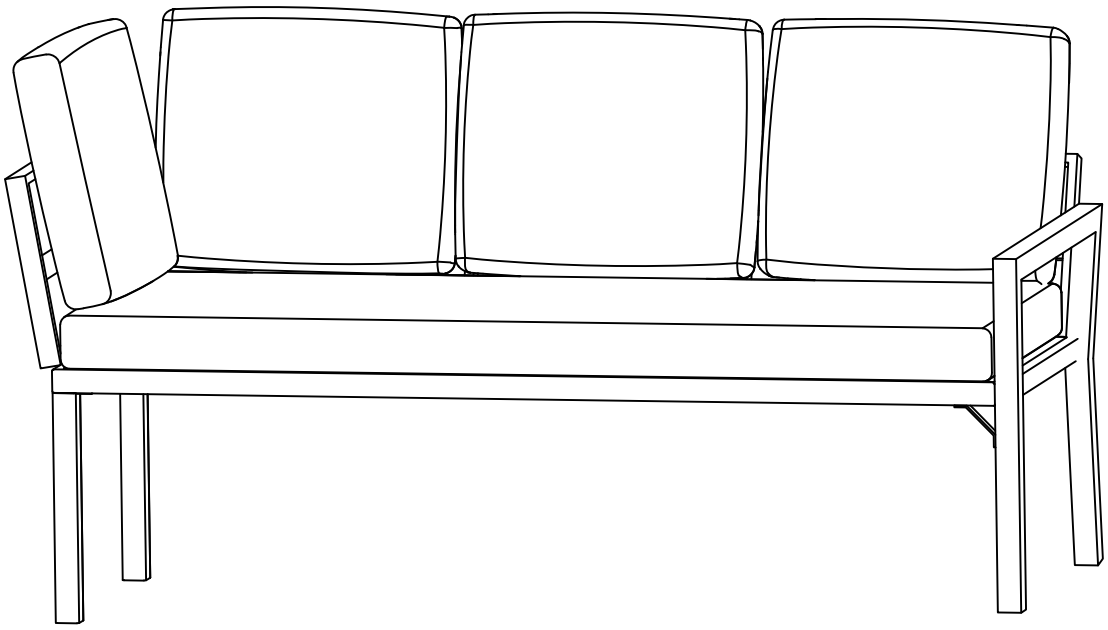

0 1 2 3 4 5 6 7 8 9 10 11 12 13 14 15

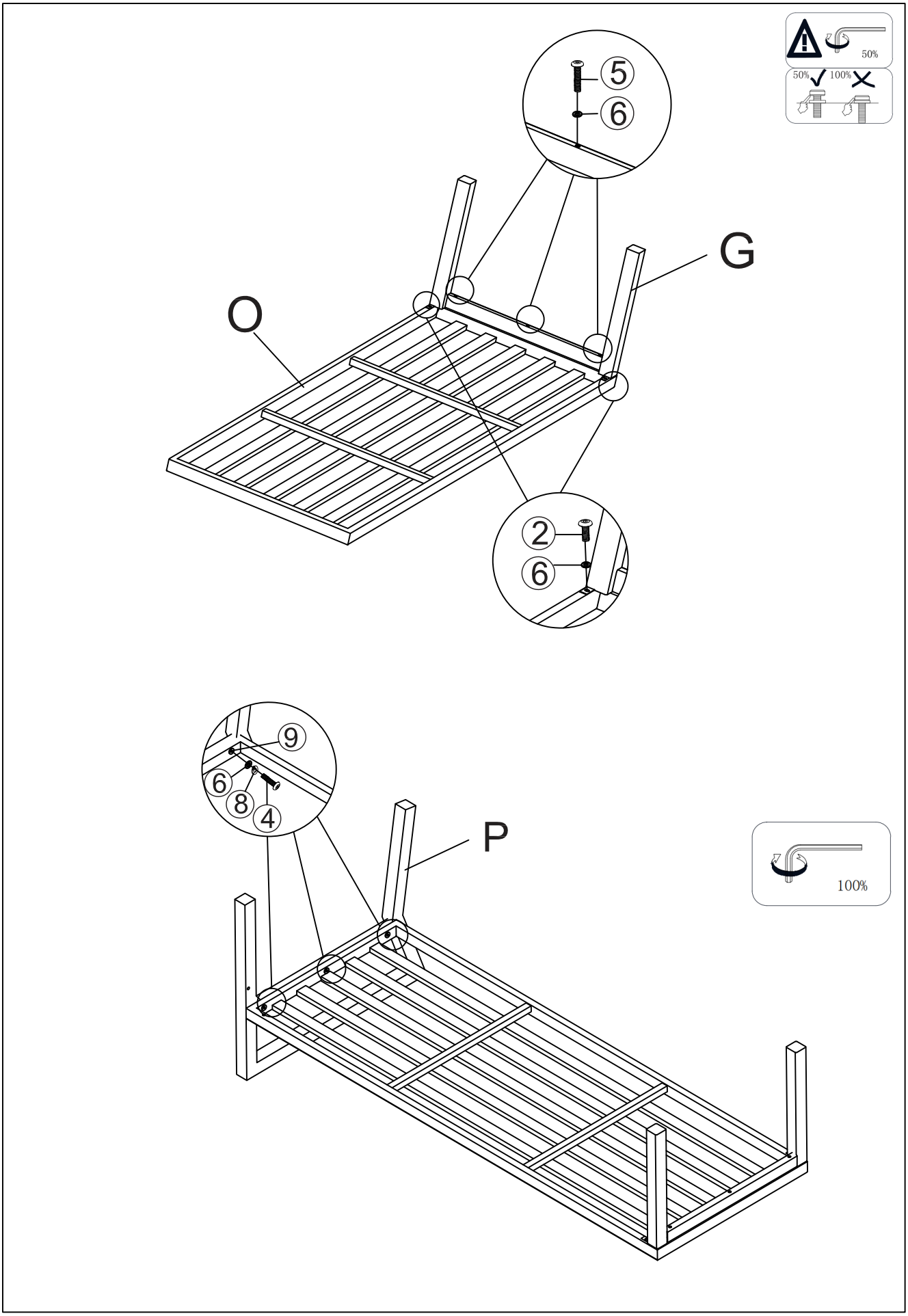

0 1 2 3 4 5 6 7 8 9 10 11 12 13 14 15

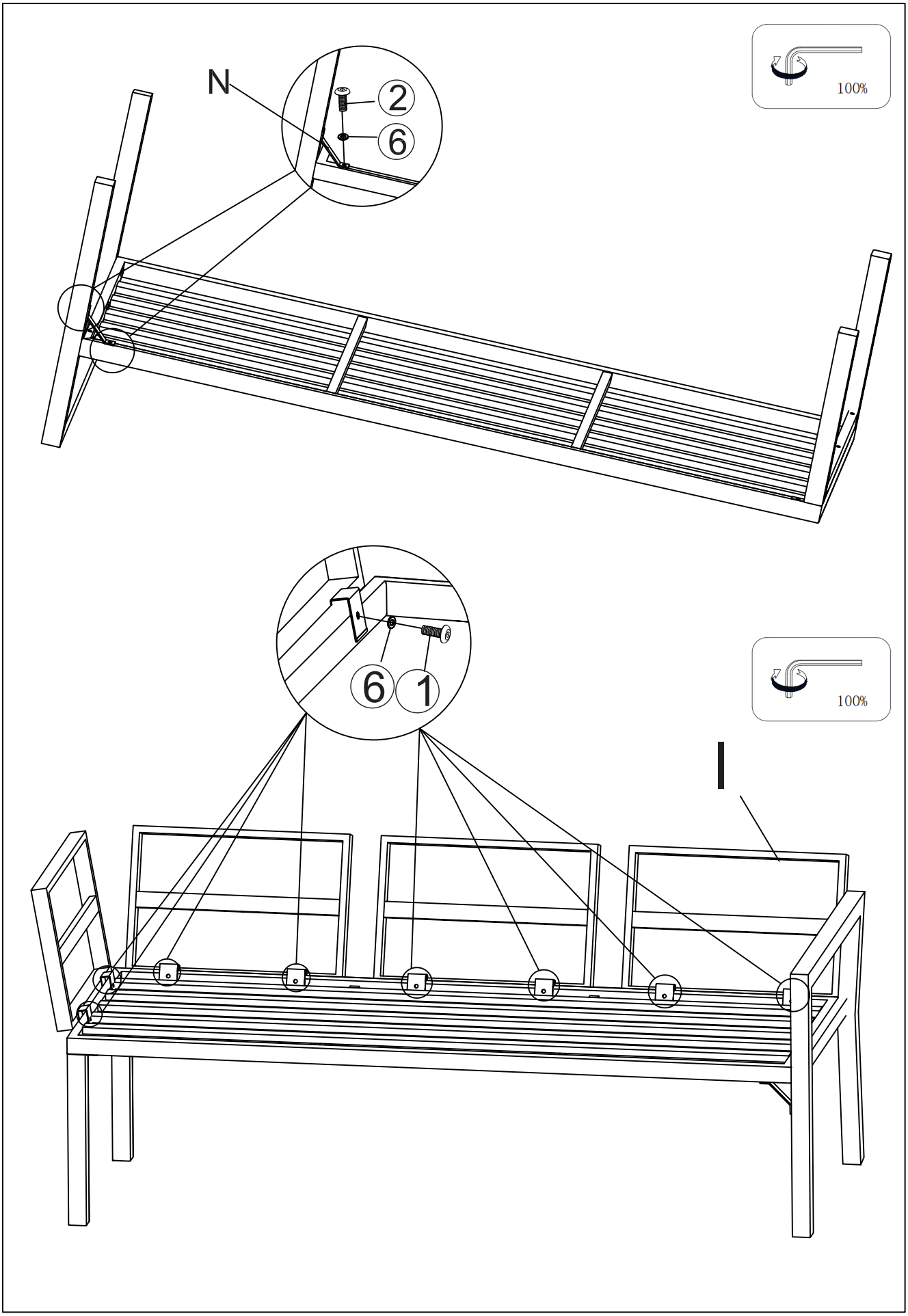
N
2
6
100%
6
1
100%
I


0 1 2 3 4 5 6 7 8 9 10 11 12 13 14 15

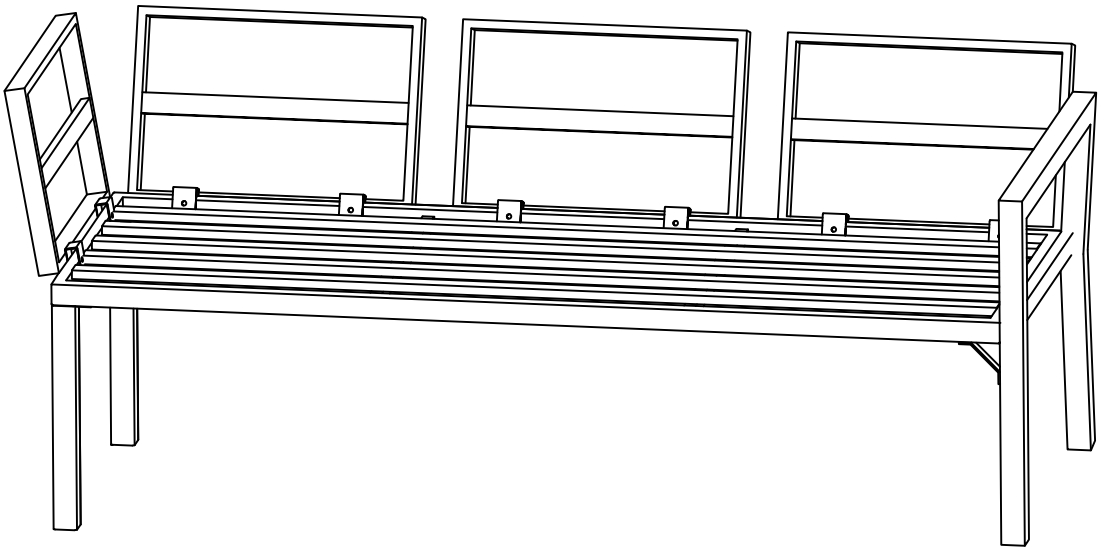

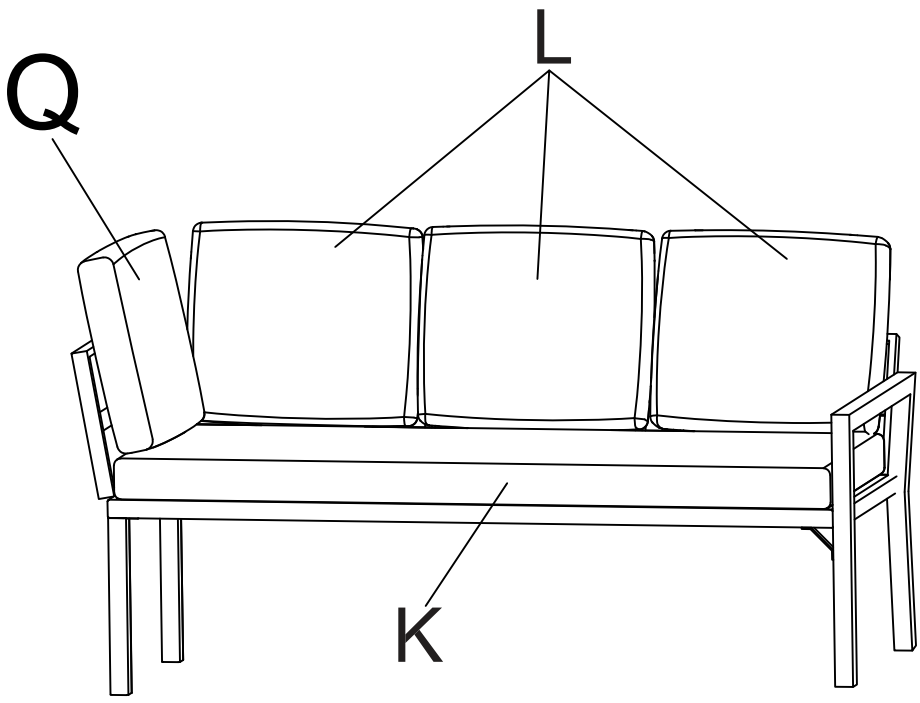
Q
L
K


0 1 2 3 4 5 6 7 8 9 10 11 12 13 14 15

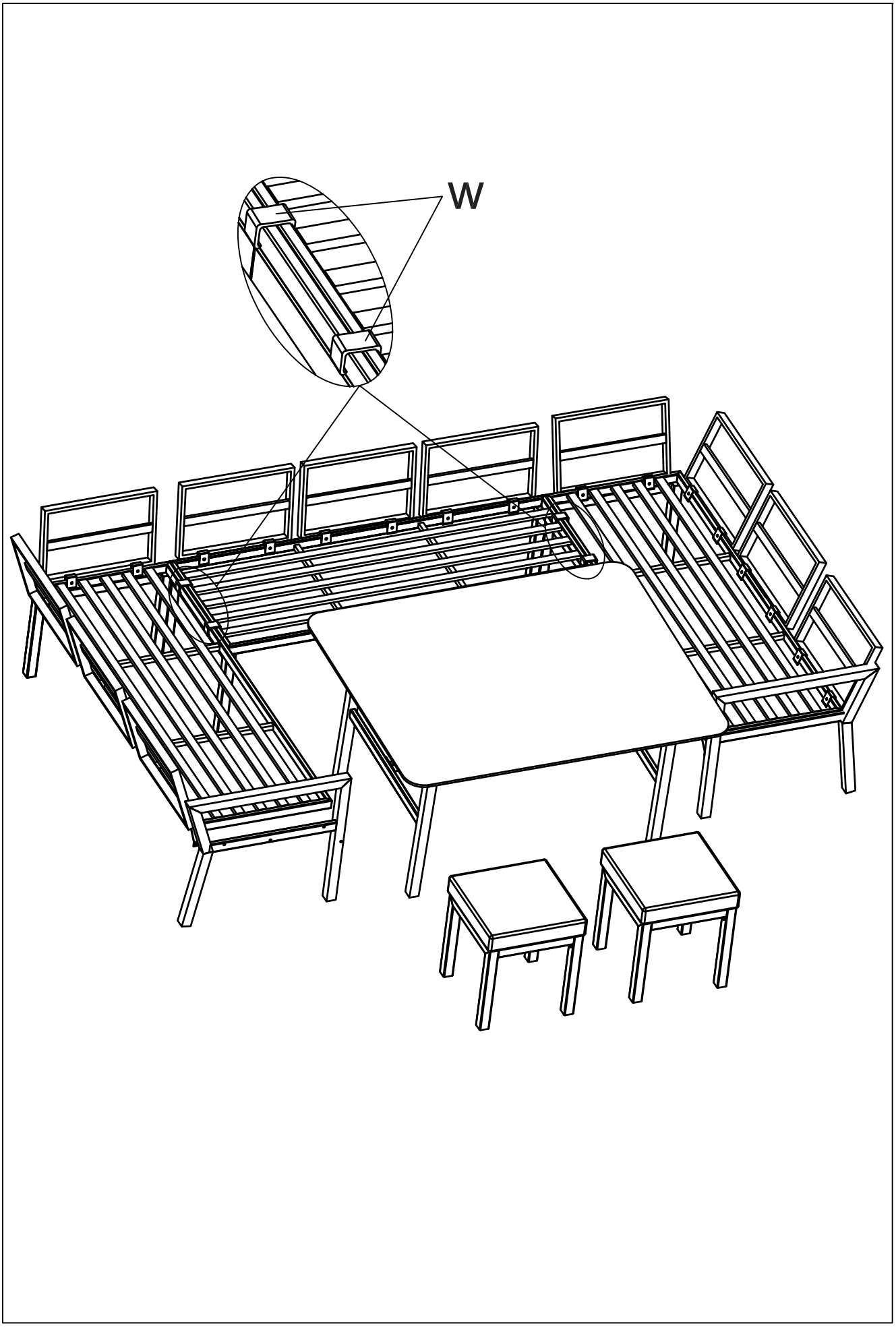
W

