| Art No | Description |
|---|---|
| 88888-281 | SP- Estelle Dining table-Screw Set |

VENTURE DESIGN
HOME & INTERIOR

18021-580

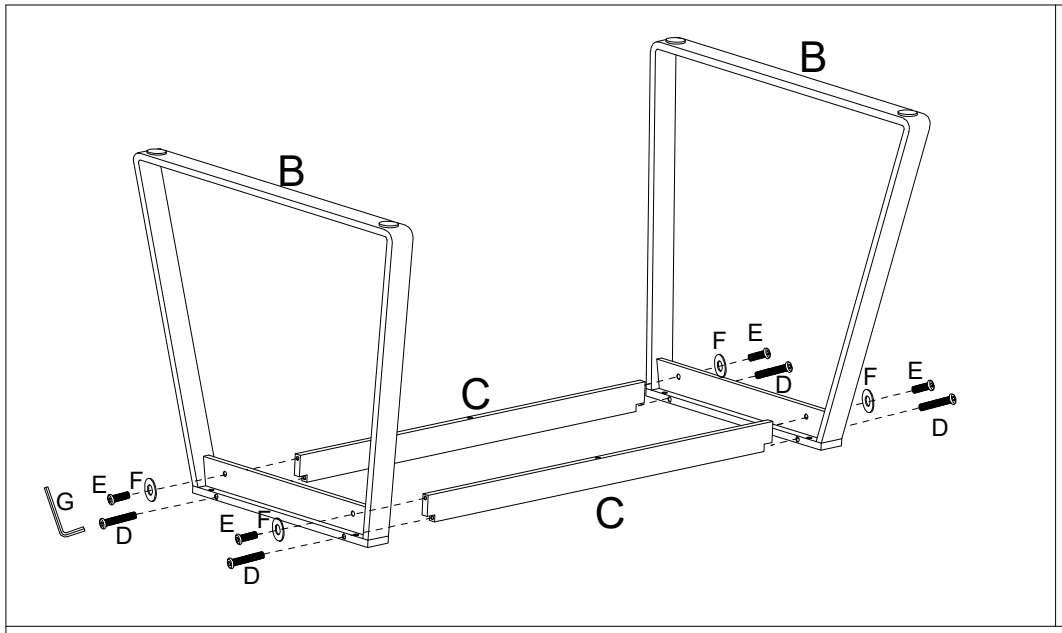


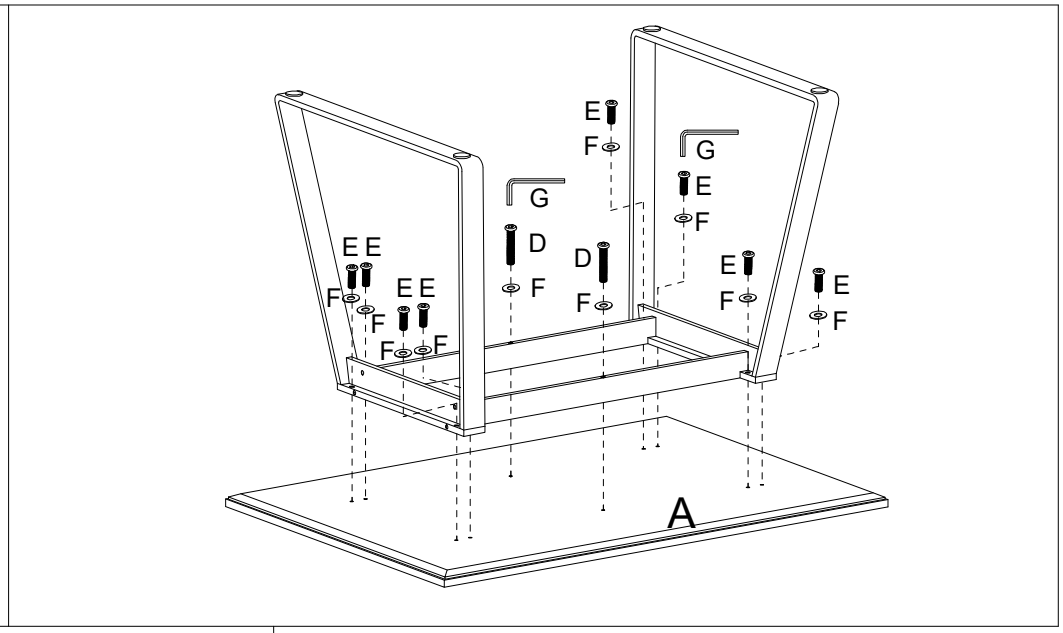


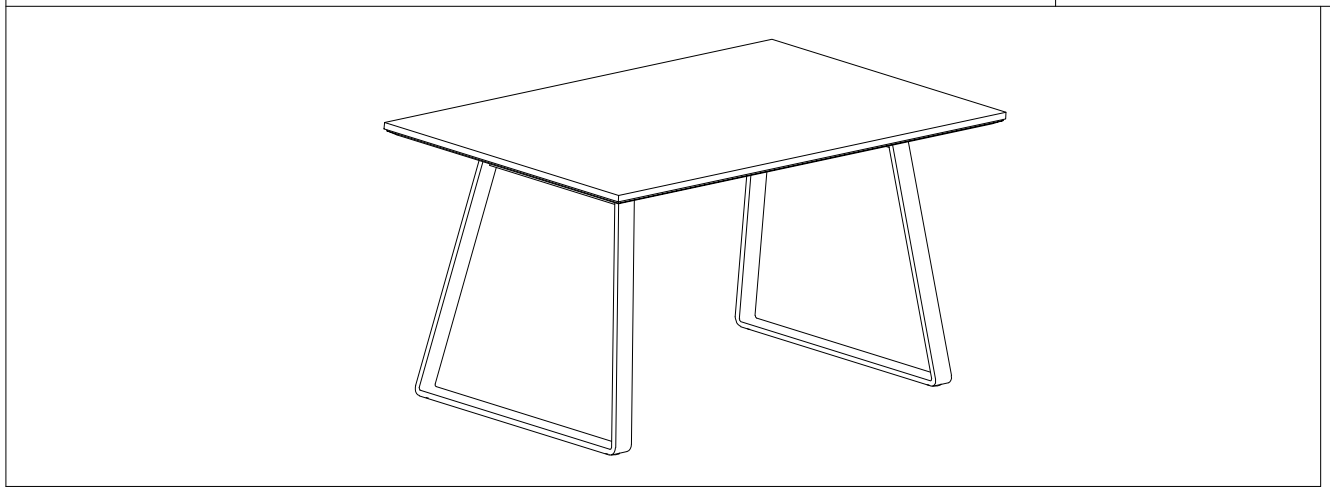

| | | | |
|---|---|---|---|
| A | | 1 | |
| B | | 2 | |
| C | | 2 | |
| D | | 6 | 88888-281 |
| E | | 12 | 88888-281 |
| F | | 14 | 88888-281 |
| G | | 1 | 88888-281 |