Art No	Description
88888-281	SP- Razzia Side table-Screw Set

VENTURE DESIGN
HOME & INTERIOR

18036-680

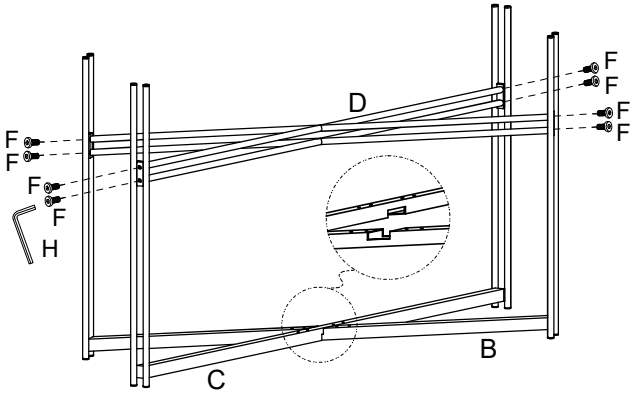

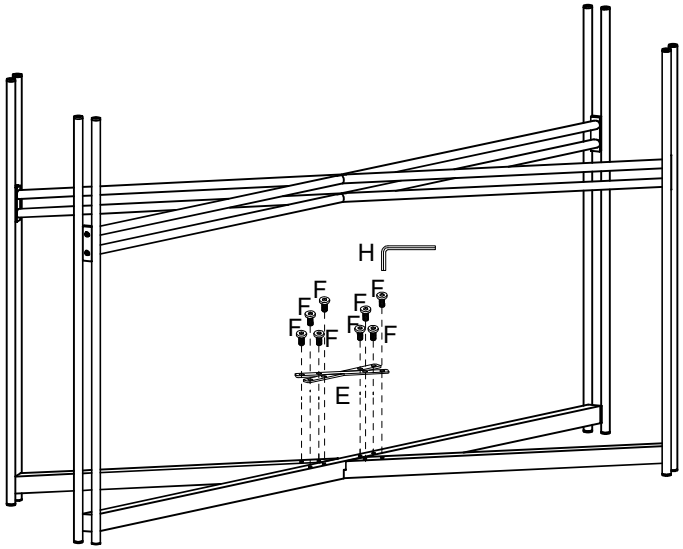

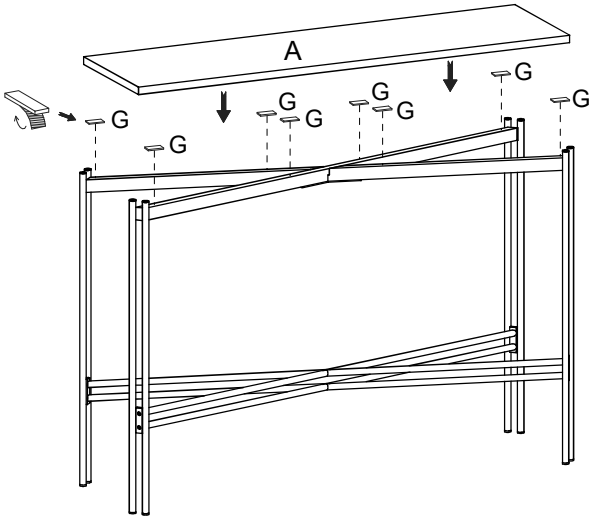

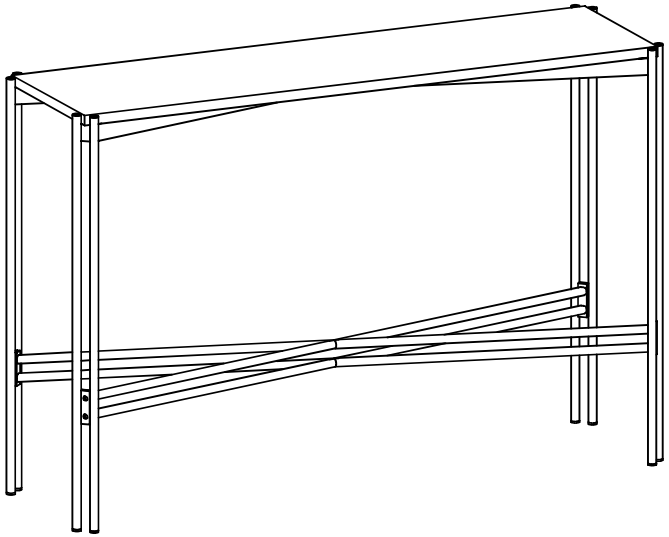

A		1	
B	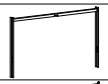	1	
C	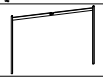	1	
D		1	
E		1	
F		16	88888-281
G		8	88888-281
H		1	88888-281