Art No	Description
88888-421	SP- Razzia Dining table-Screw Set
88888-422	SP- Razzia Dining table-Plastic Feet
88888-423	SP- Razzia bord rund 18042-685-Table leg-Black
88888-427	SP- Razzia Dining table-Grey Terazzo

VENTURE DESIGN
HOME & INTERIOR

18042-685

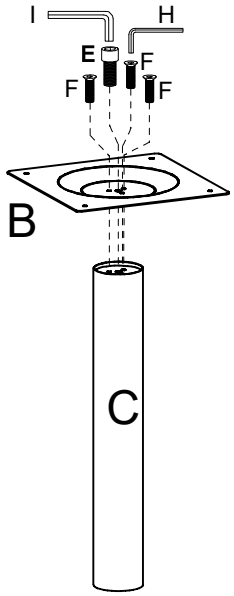

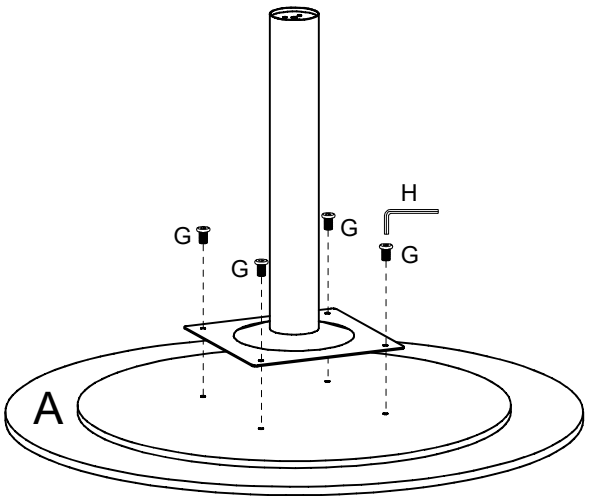

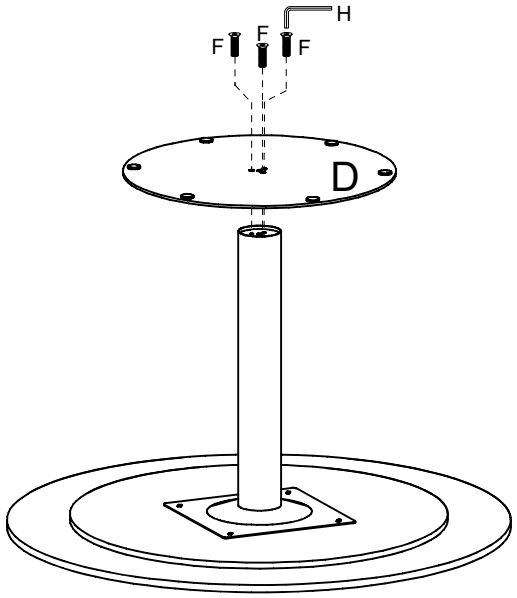

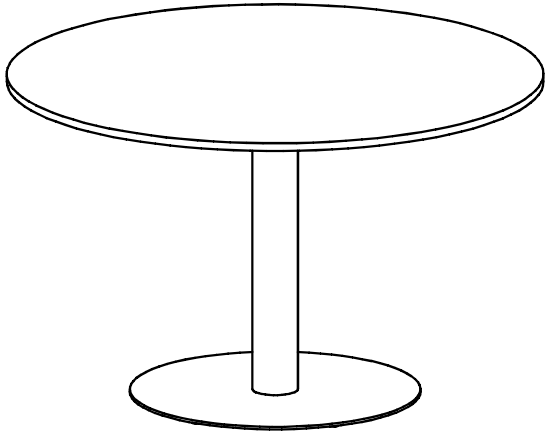

A		1	88888-427
B		1	88888-423
C		1	88888-423
D		1	88888-423
E		1	88888-421
F		6	88888-421
G		4	88888-421
H		1	88888-421
I		1	88888-421