ASSEMBLY INSTRUCTION

23210006-01/02/03

(1)X1

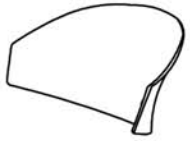

(2)X1

(3)X1

(4)X1

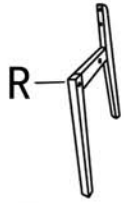

(5)X1

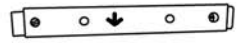

(6)X1

(7)X4(M6X45MM)

(8)X4(M6X32MM)

(9)X4(M6x25MM)

(10)X12(M6X15X1MM)
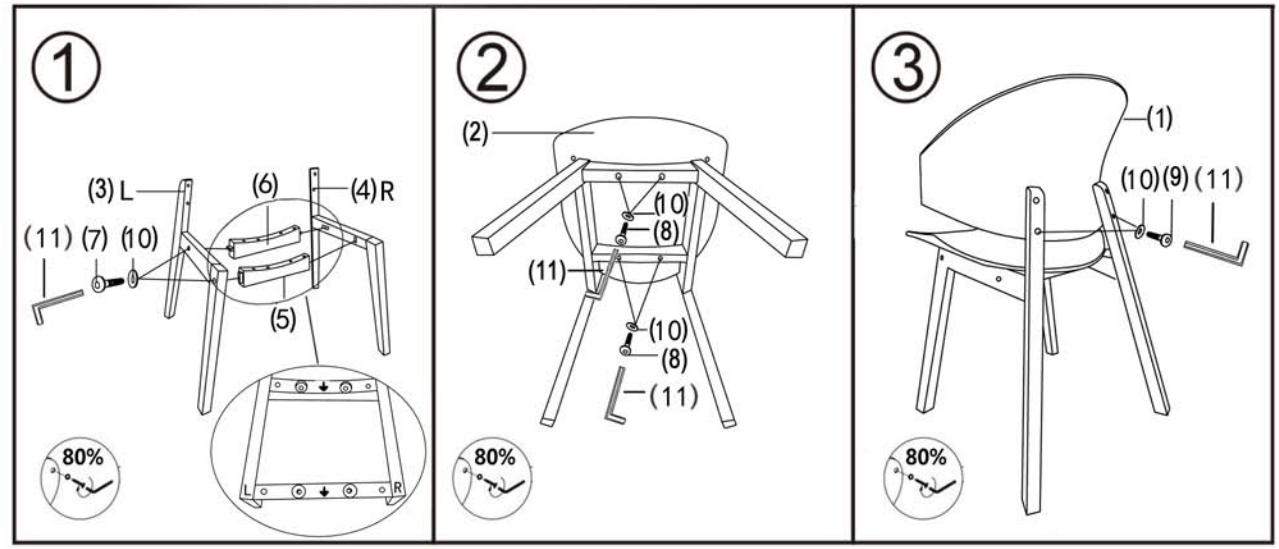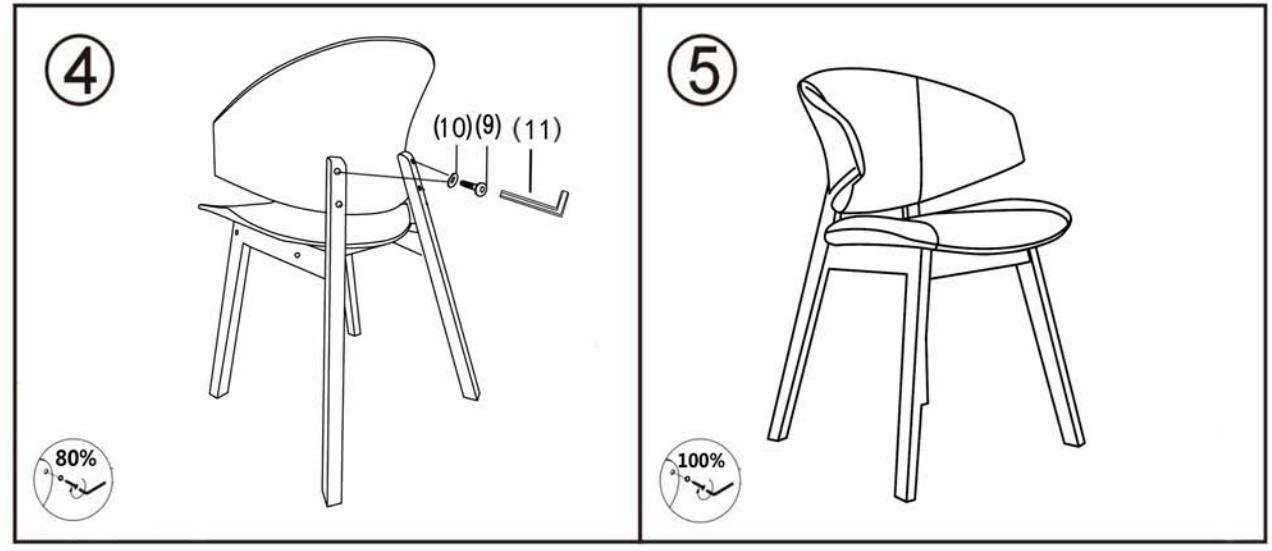
(11)X1