NAGOS 01560004/09

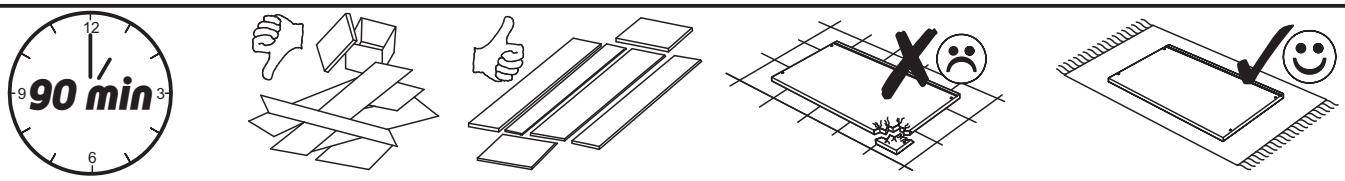

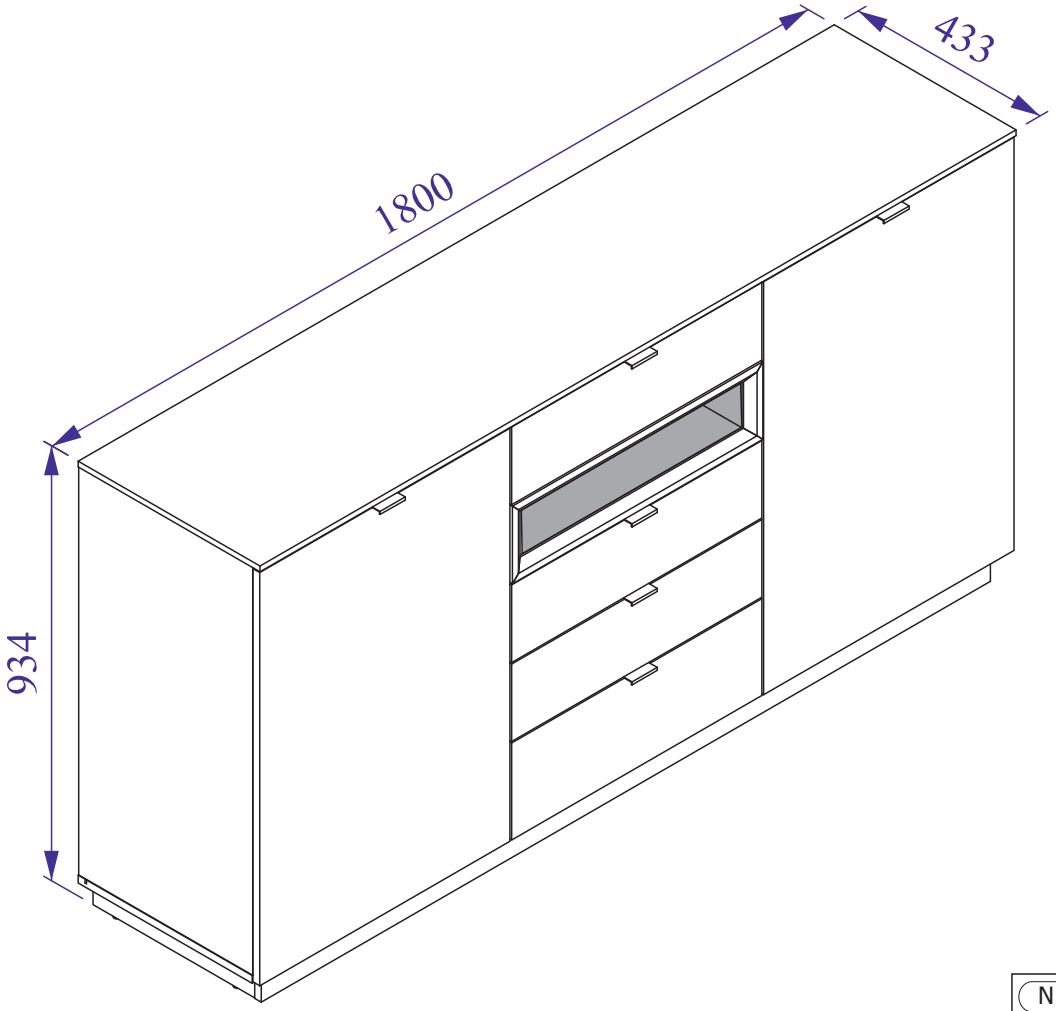

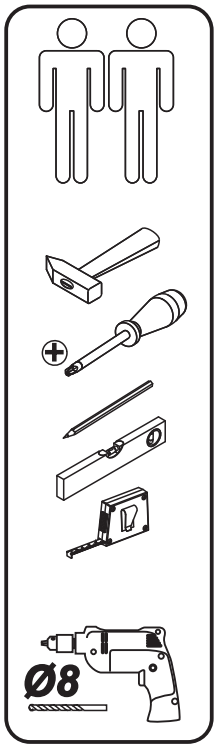

							N Ø10x2 x12	J x8
L Ø3x18 x24	M3 Ø3,5x30 x8	M Ø4x13 x26	M2 Ø4x25 x8	P Ø4x35 x10	A Ø8x30 x42	B Ø7x45 x28	C Ø15x12 x28	D Ø18 x24
E Ø7x50 x26	E1 Ø12 x14	O x6	O1 Ø3x16 x28	I x20	Q x4	Q1 Ø6,3x13 x8	F x1	T1 Ø8x50 x2
T2 Ø5.5x50 x2	R x2	G2 x16	K x8	U L 350mm x4	V R 350mm x4	U1 L x4	V1 R x4	W Ø20 x8

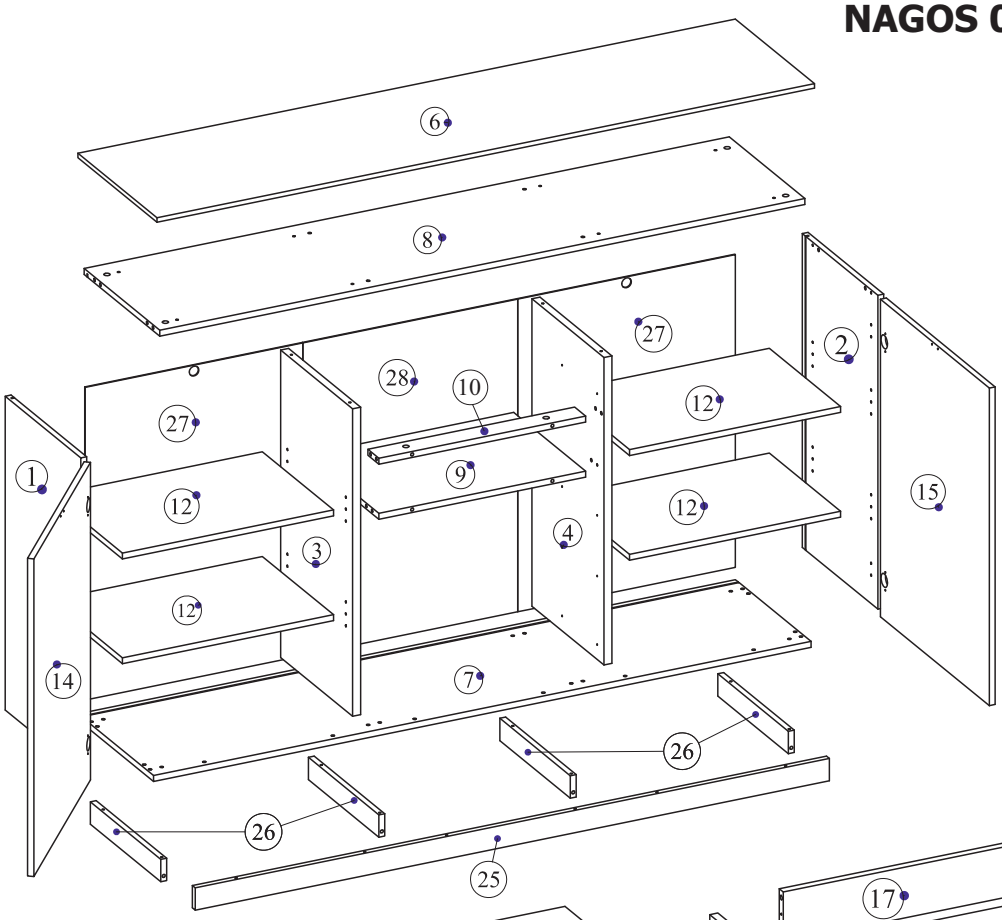

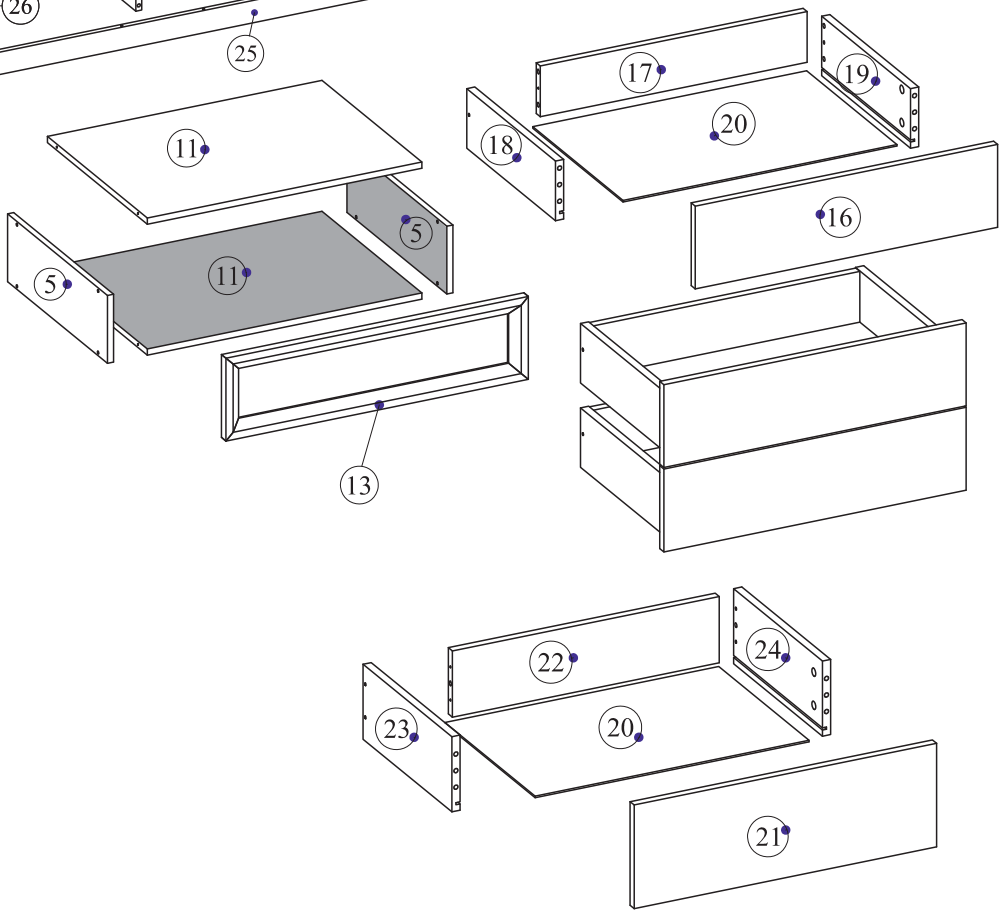

№	L	B	S	Q	
1	842	414	16	1	2/3
2	842	414	16	1	2/3
3	825	394	22	1	3/3
4	825	394	22	1	3/3
5	131	394	12	2	3/3
6	1800	433	12	1	2/3
7	1800	414	16	1	2/3
8	1766	414	16	1	2/3
9	566	394	16	1	3/3
10	566	60	16	1	1/3
11	541	394	12	2	3/3
12	578	390	16	4	3/3
13	596	160	18,4	1	1/3
14	852	596	16	1	1/3
15	852	596	16	1	1/3
16	596	160	16	3	1/3
17	526	98	16	3	1/3
18	350	115	16	3	3/3
19	350	115	16	3	3/3
20	540	356	3	4	1/3
21	596	200	16	1	1/3
22	526	128	16	1	1/3
23	350	145	16	1	3/3
24	350	145	16	1	3/3
25	1736	60	16	1	2/3
26	386	60	16	4	1/3
27	839	596	3	2	1/3
28	839	588	3	1	1/3

1

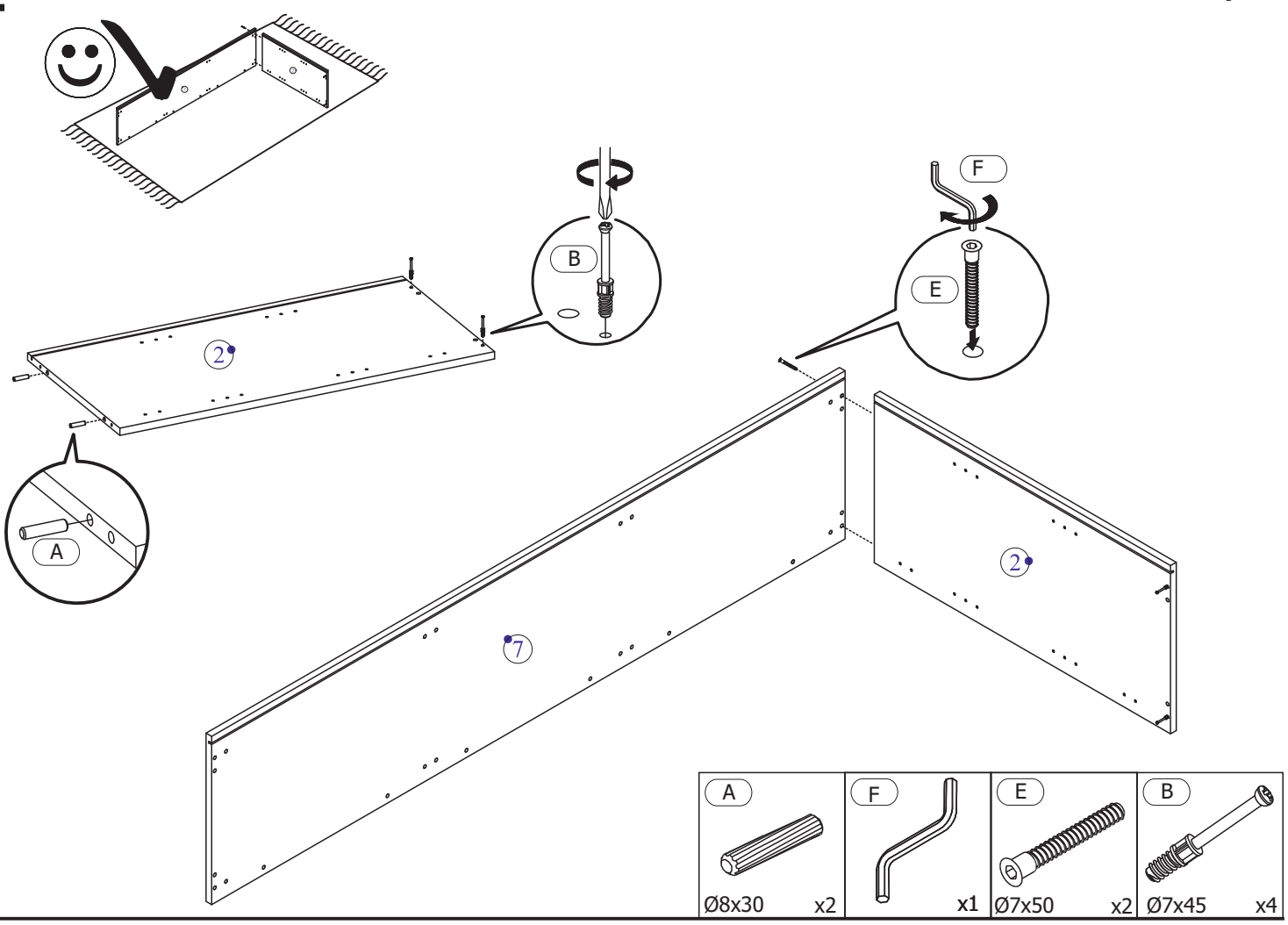
B
F
E
2
A
2
7
A
Ø8x30
x2
F
x1
E
Ø7x50
x2
B
Ø7x45
x4

2

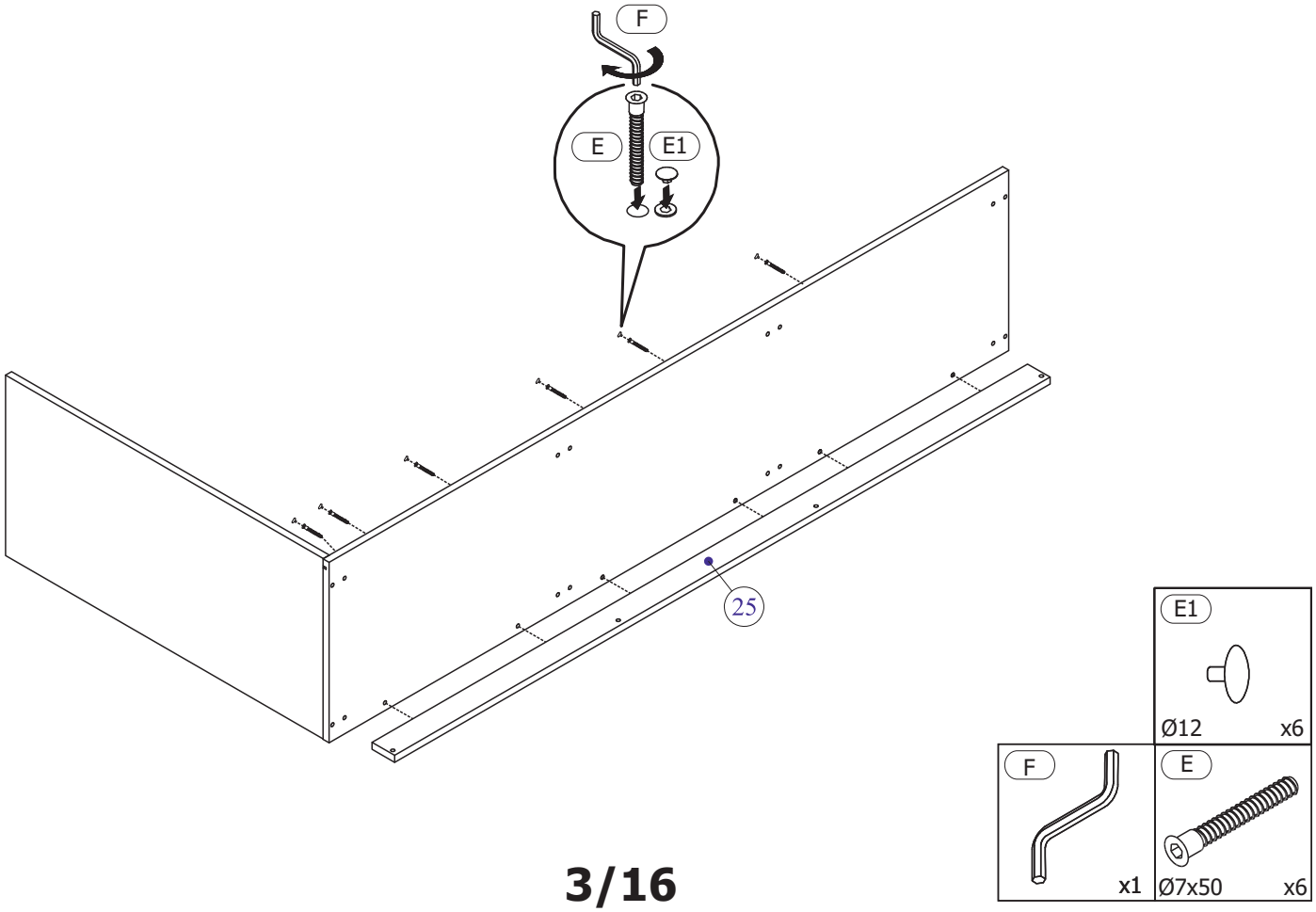
F
E
E1
25
E1
Ø12
x6
F
x1
E
Ø7x50
x6

3

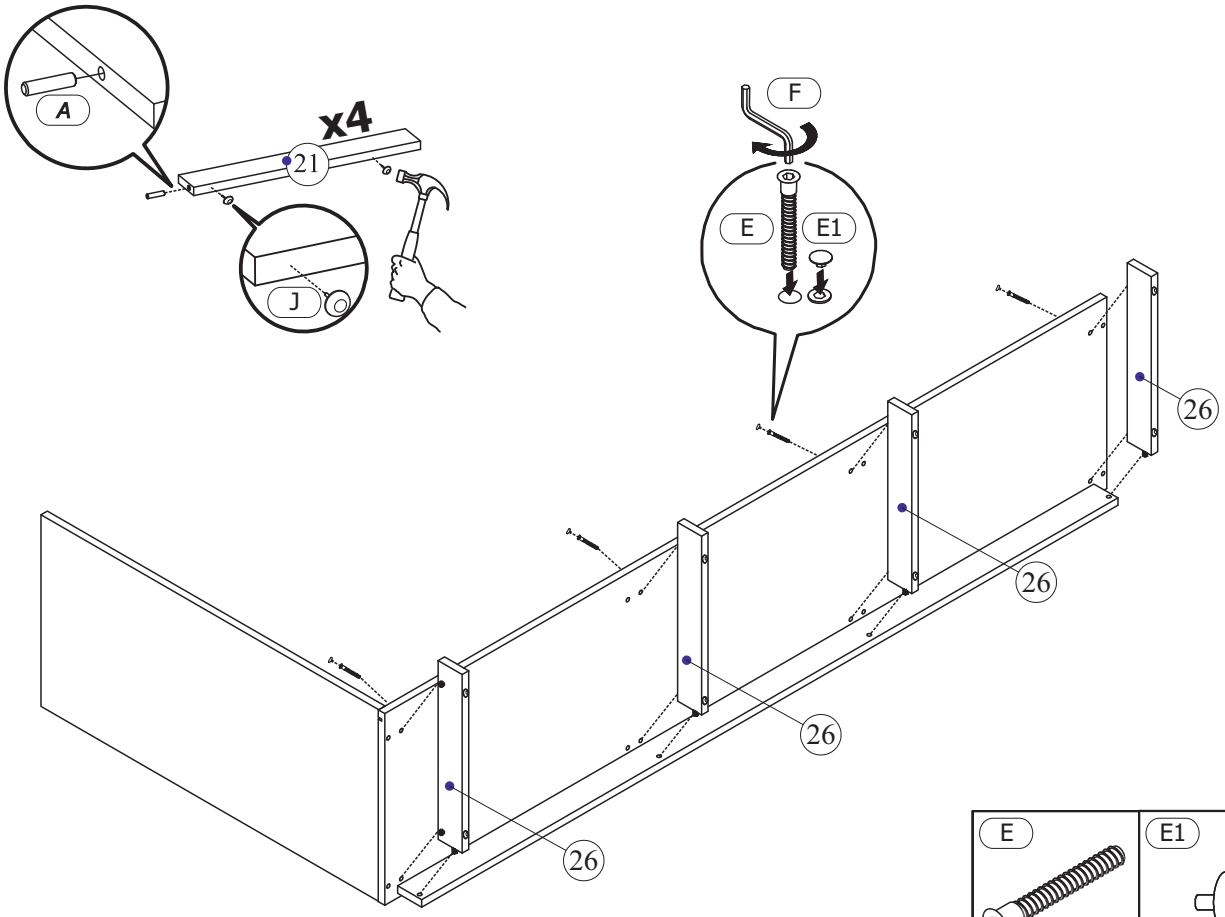

F	J	E	E1	A
x1	x8	Ø7x50 x8	Ø12 x8	Ø8x30 x4

4

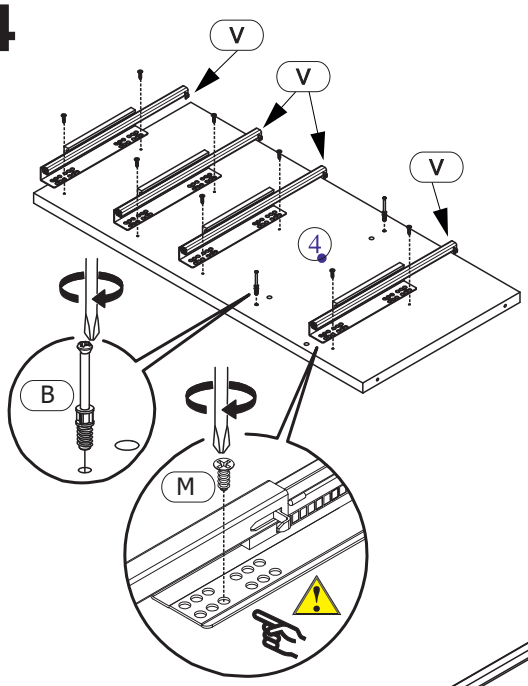

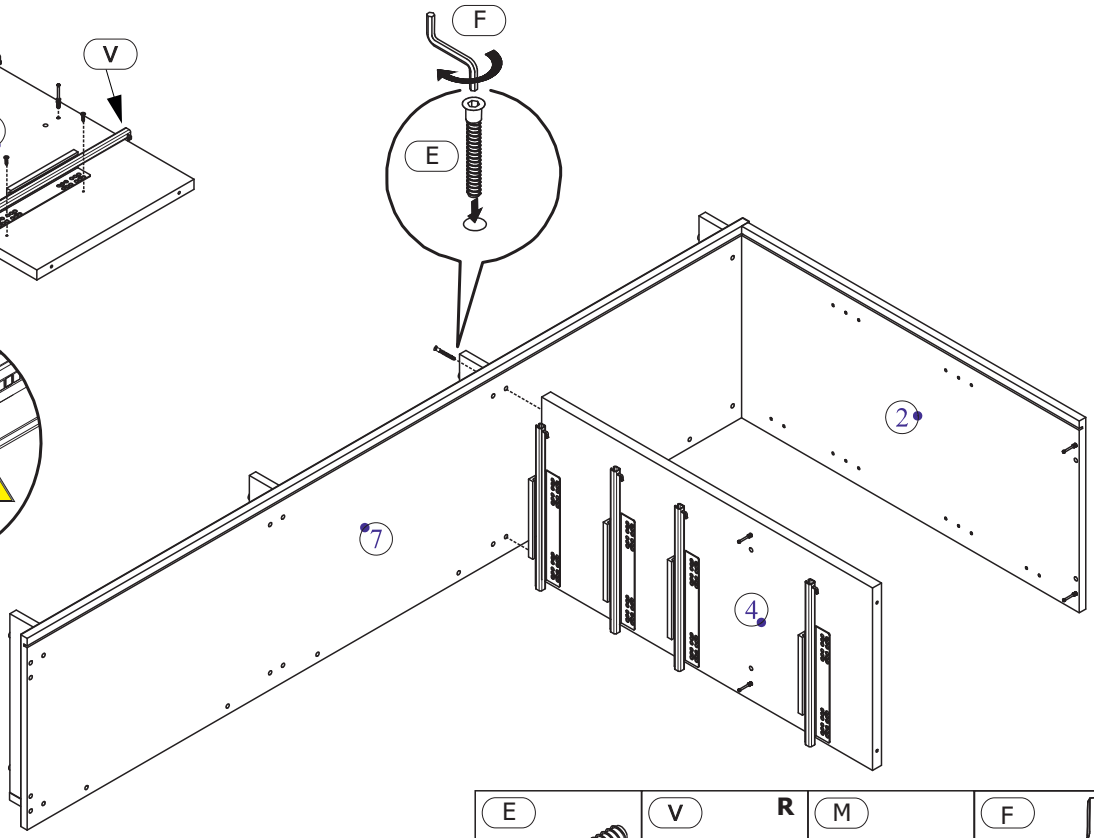

E	V R	M	F
Ø7x50 x2	350mm x4	Ø4x13 x8	x1

5

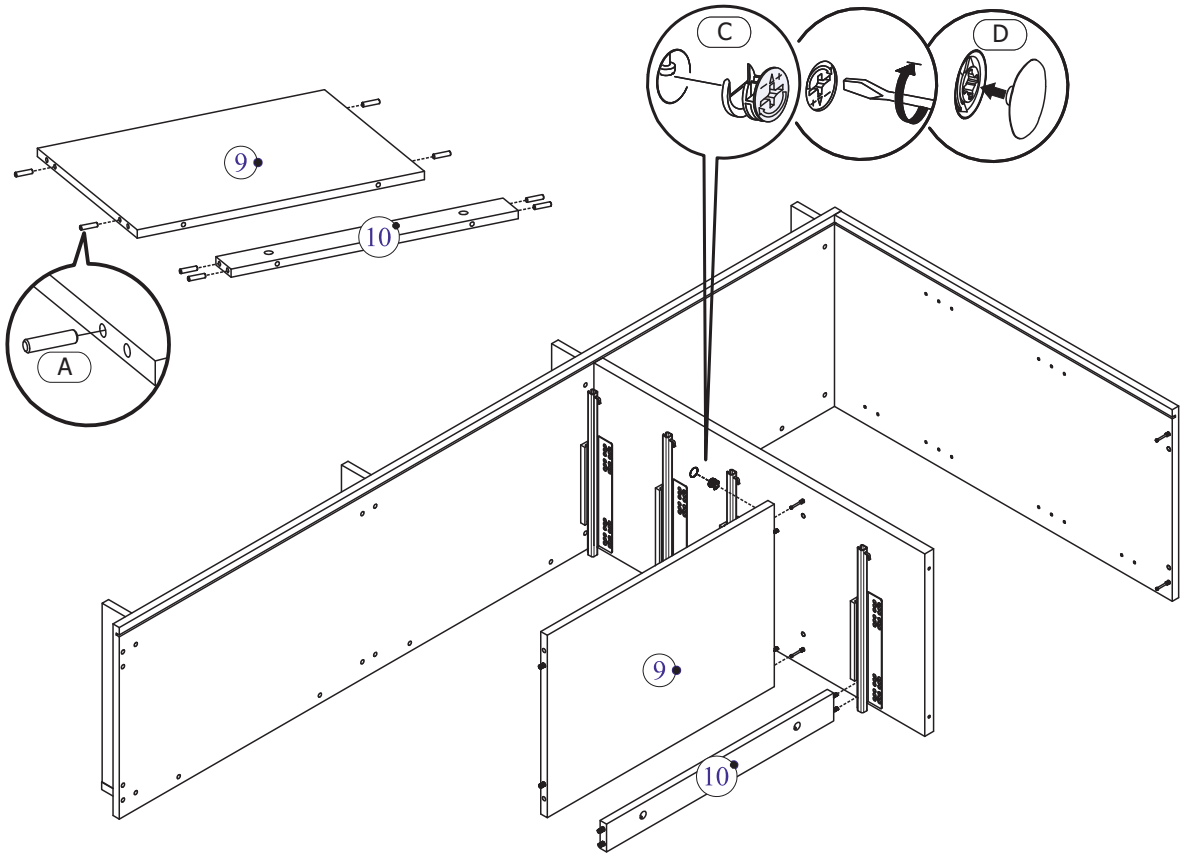

A	Ø8x30 x8
D	Ø18 x2
C	Ø15x12 x2

6

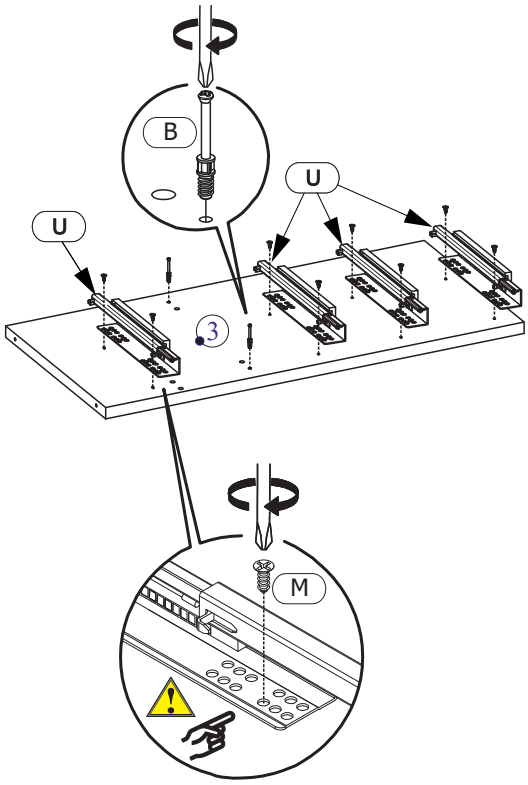

M	U L	B
Ø4x13 x8	350mm x4	Ø7x45 x2

7

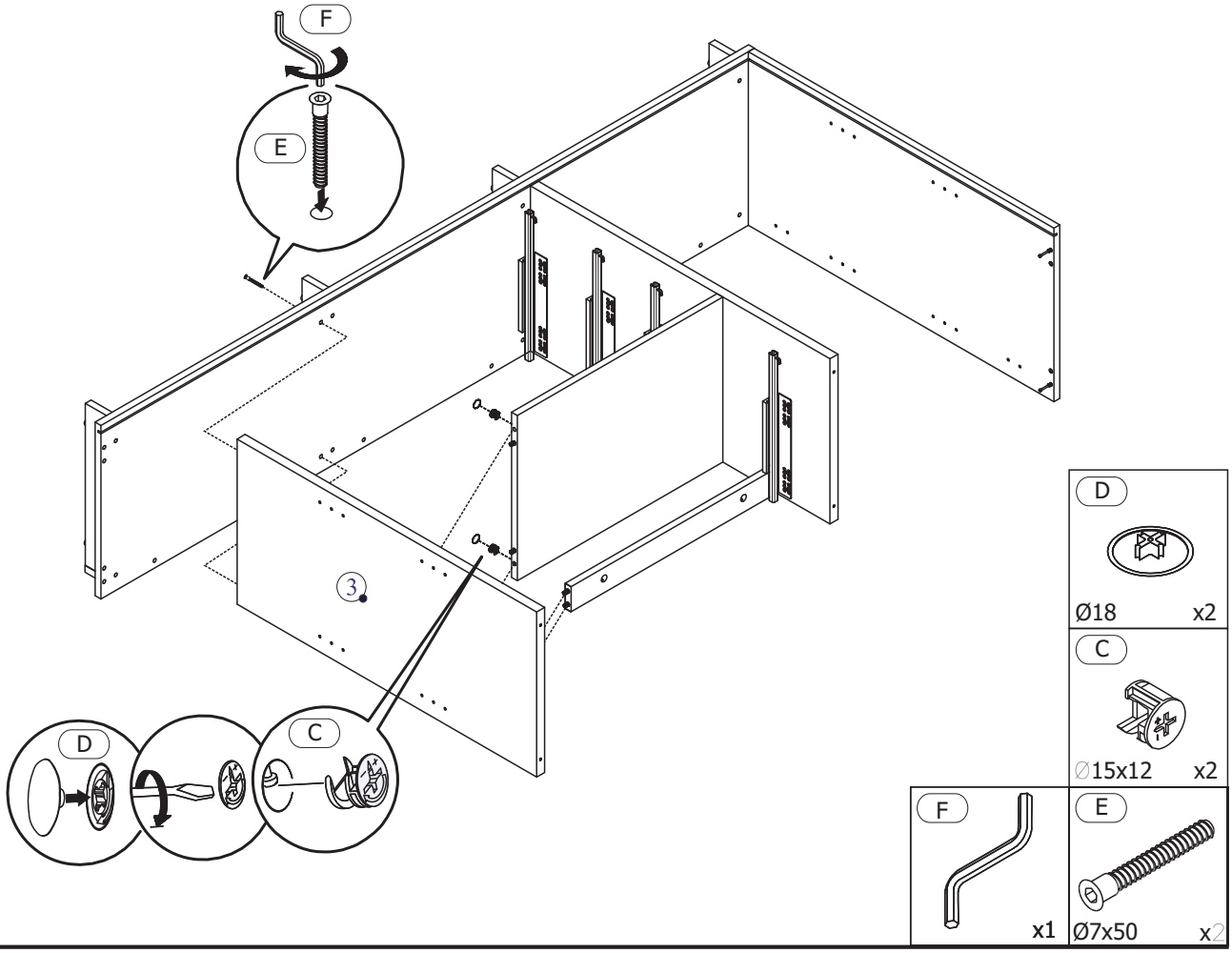

8

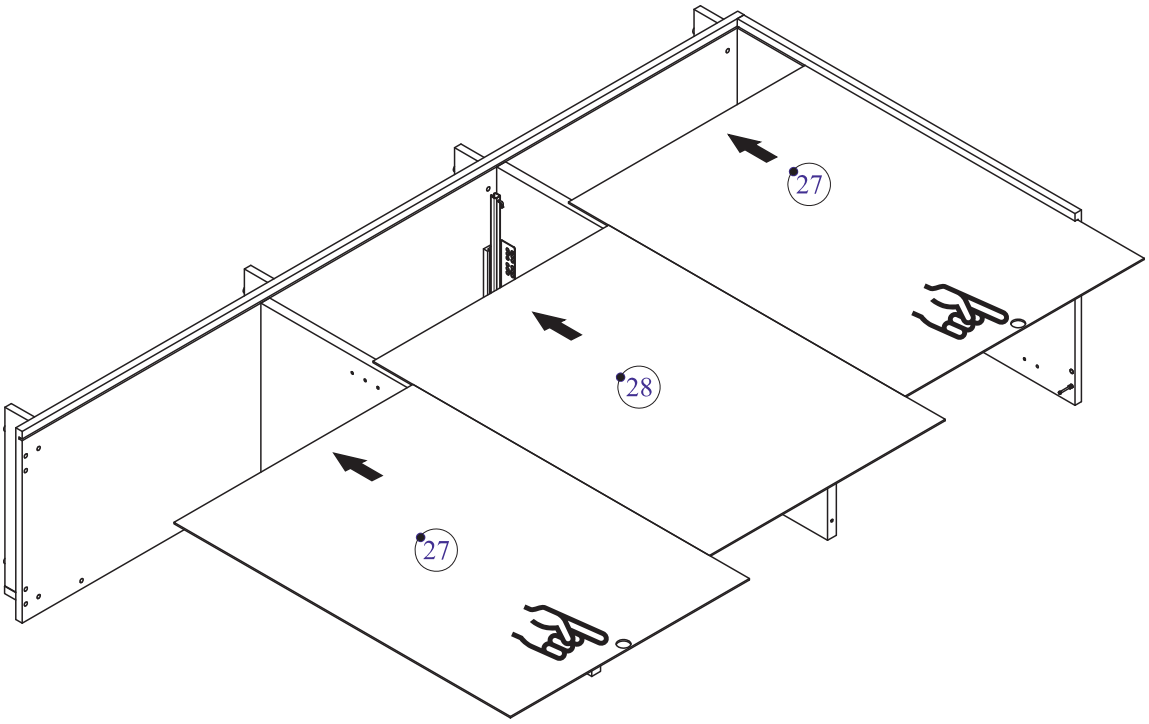

9

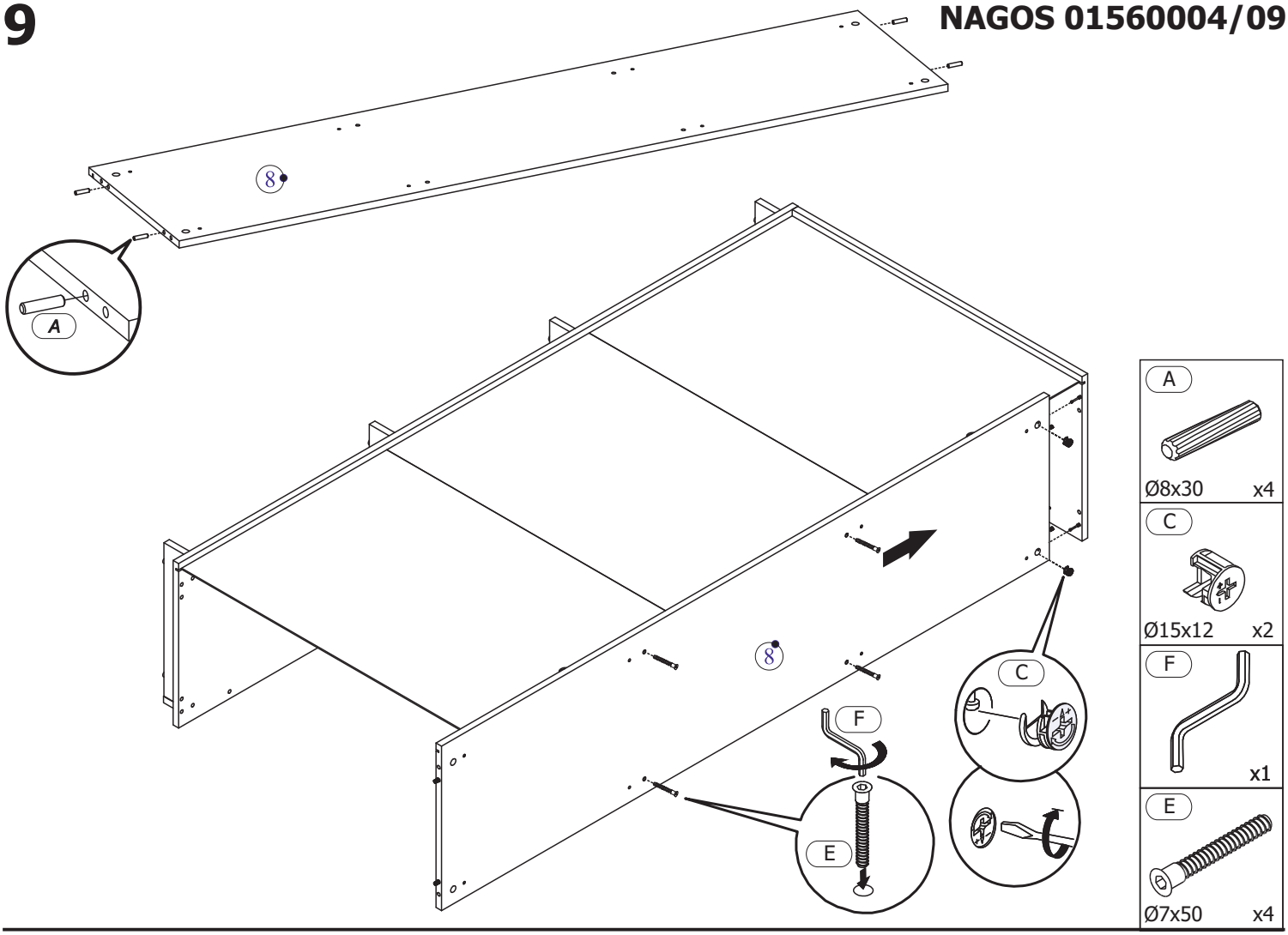
8
A
8
C
F
E
A
Ø8x30 x4
C
Ø15x12 x2
F
x1
E
Ø7x50 x4

10

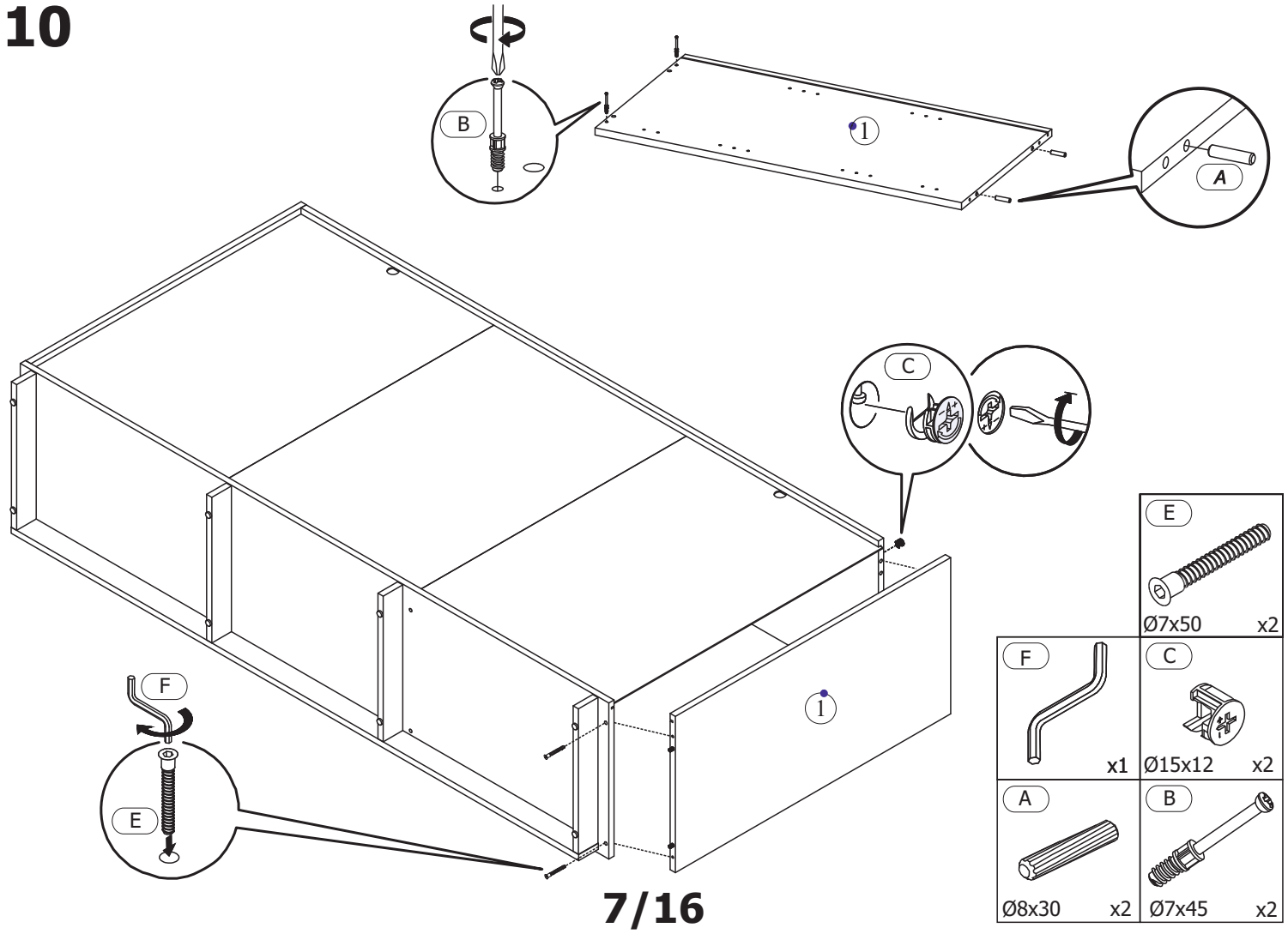
B
1
A
C
F
E
1
E
Ø7x50 x2
F
x1
C
Ø15x12 x2
A
Ø8x30 x2
B
Ø7x45 x2

10

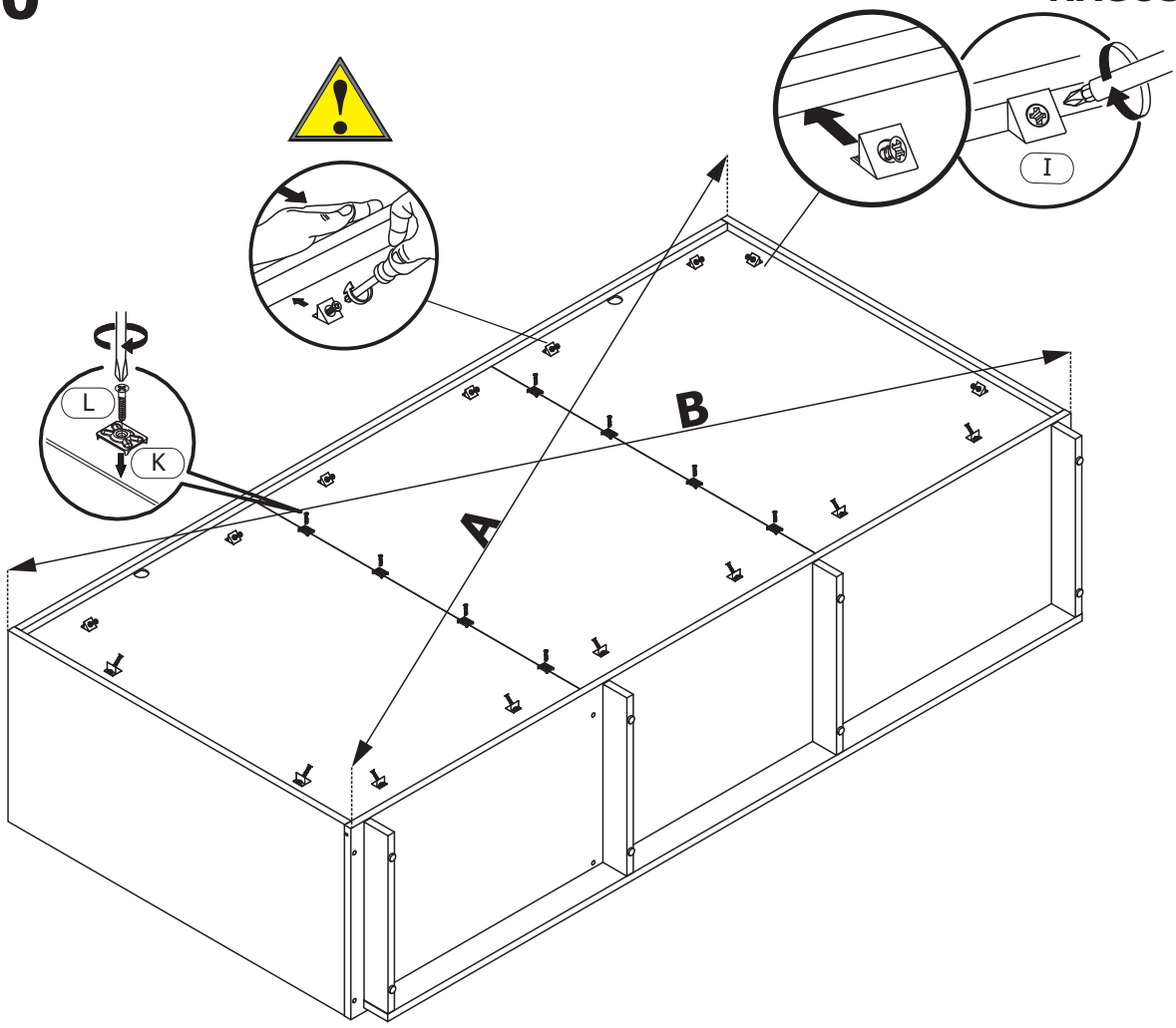

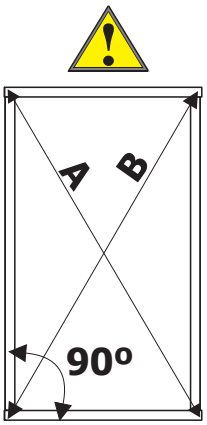

A=B

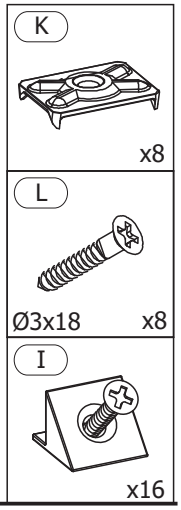

11

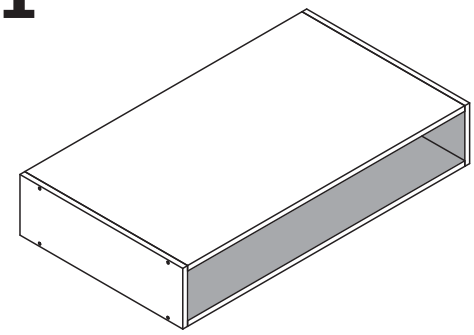

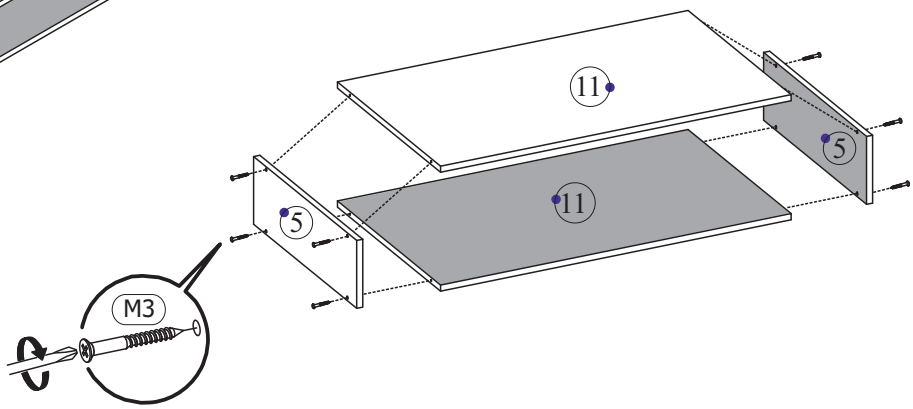

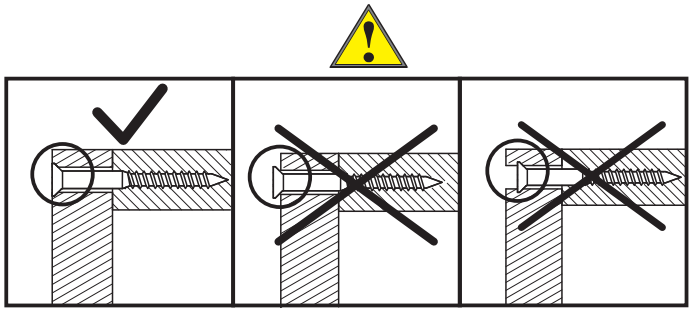

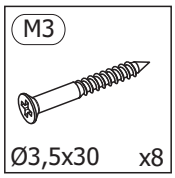

12

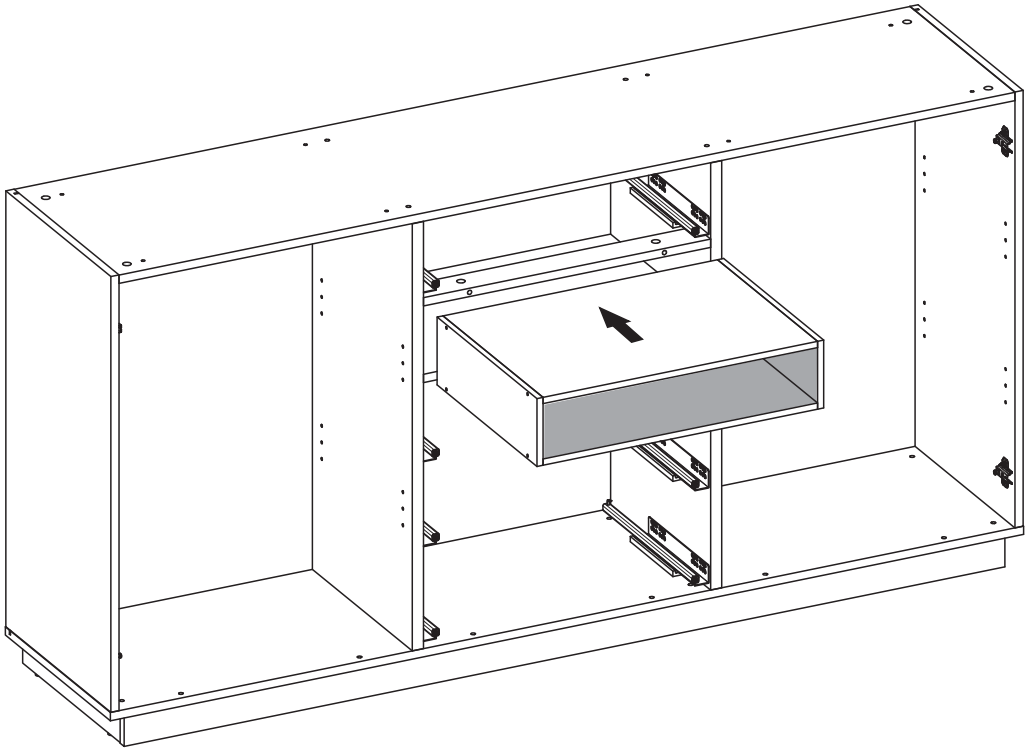

13

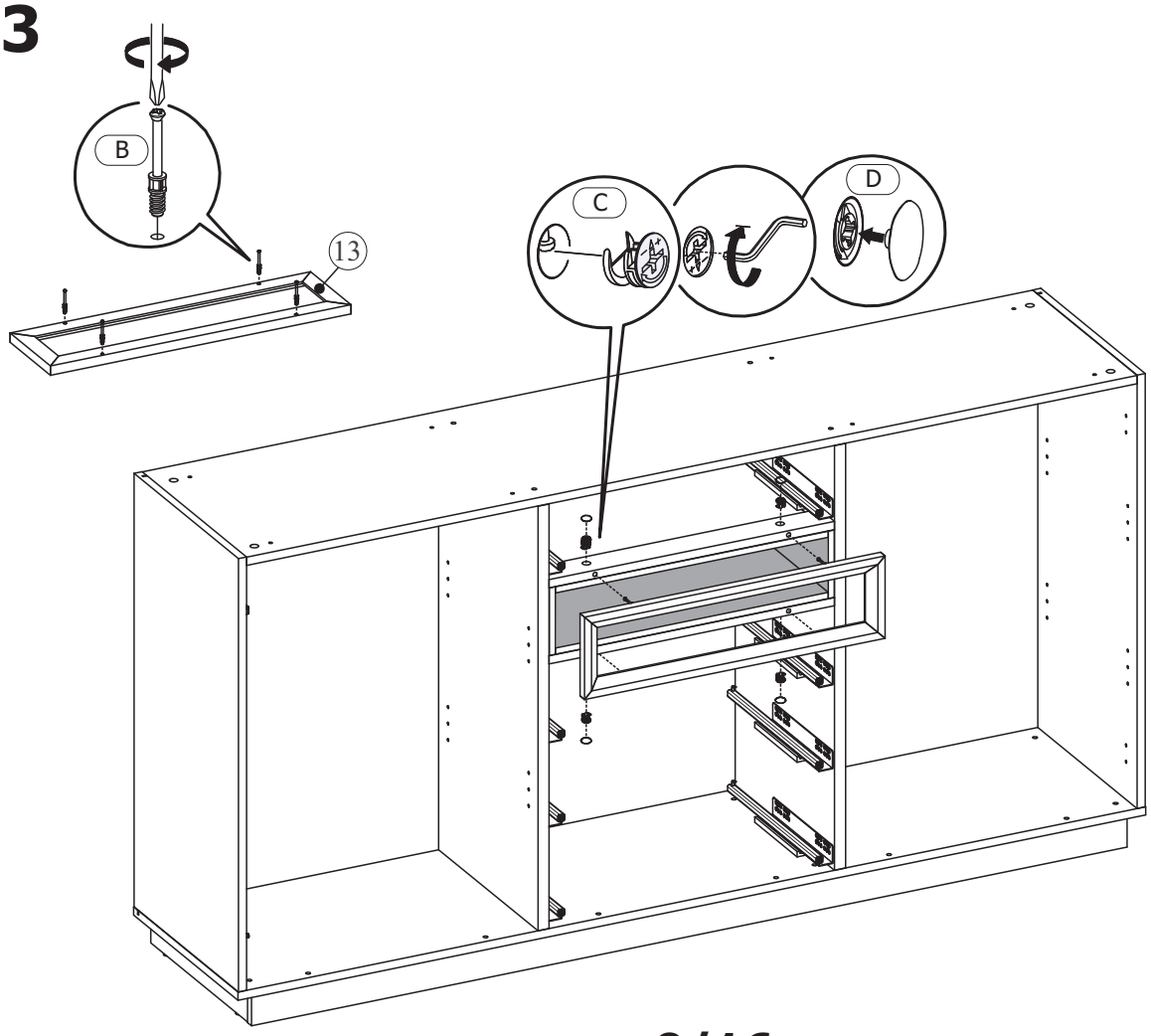

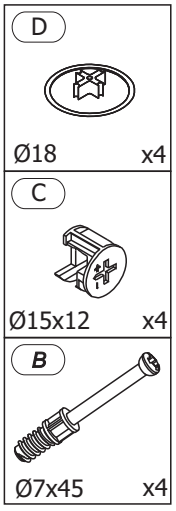

14

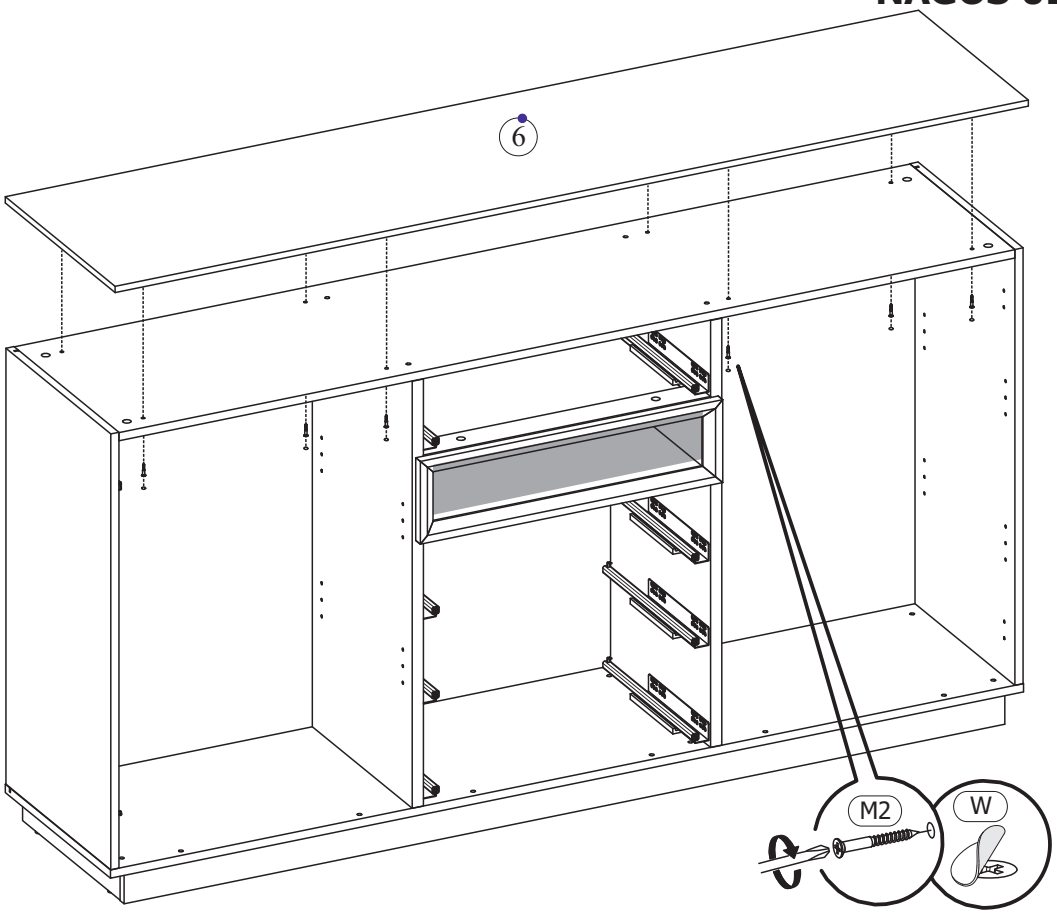
6
M2
W

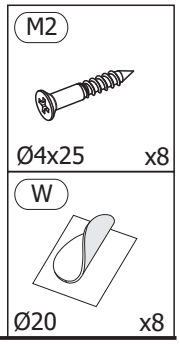
M2
Ø4x25
x8
W
Ø20
x8

15

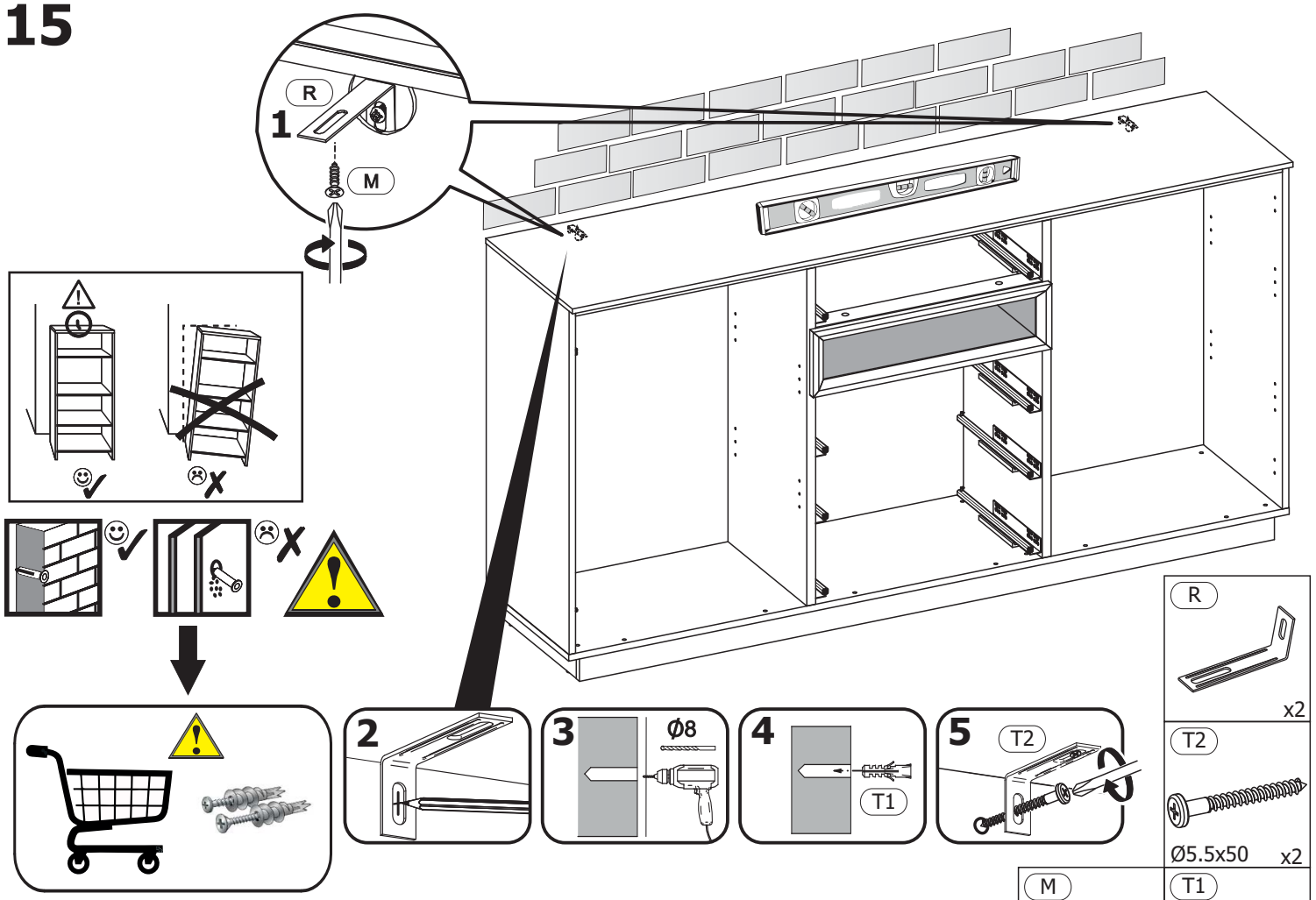
R
1
M
2
3
Ø8
4
T1
5
T2
R
x2
T2
Ø5.5x50
x2
M
Ø4x13
x2
T1
Ø8x50
x2

16

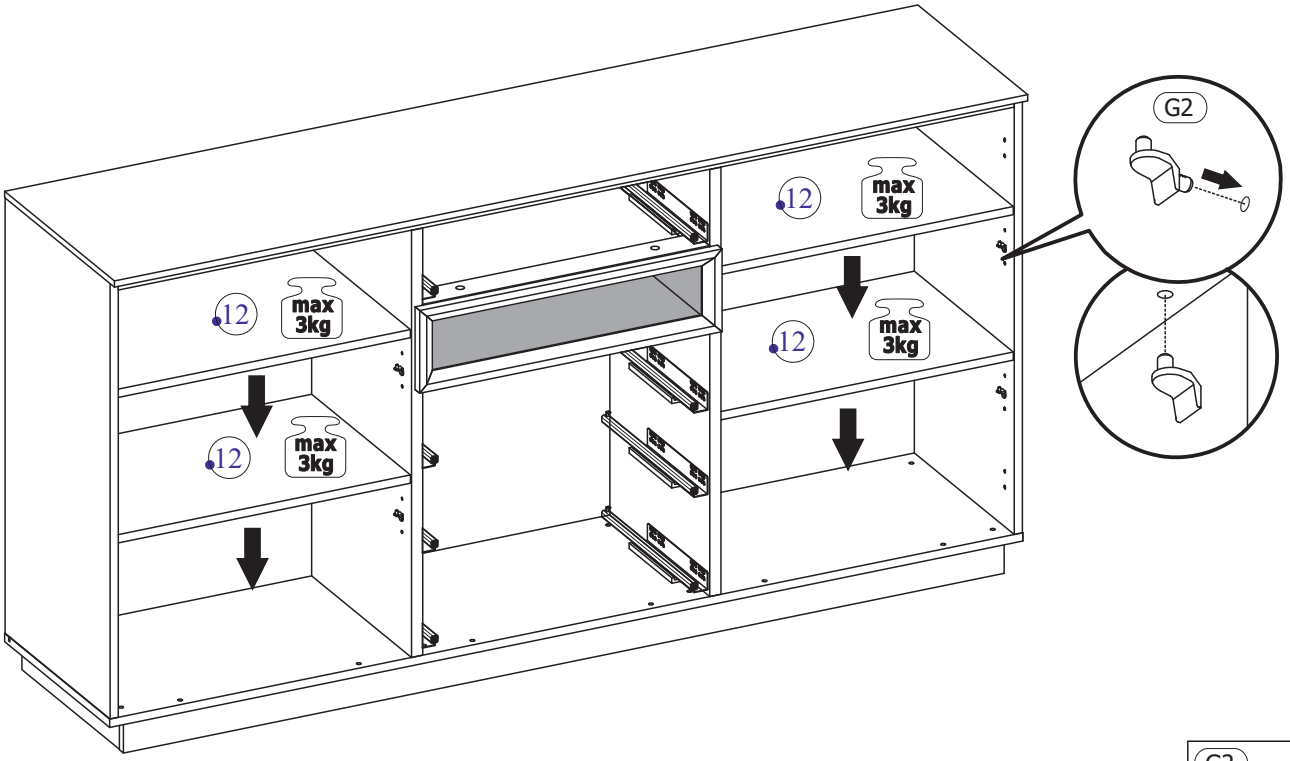
12
max 3kg
12
max 3kg
12
max 3kg
12
max 3kg
G2

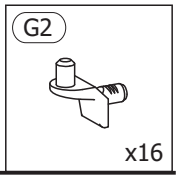
G2
x16

17

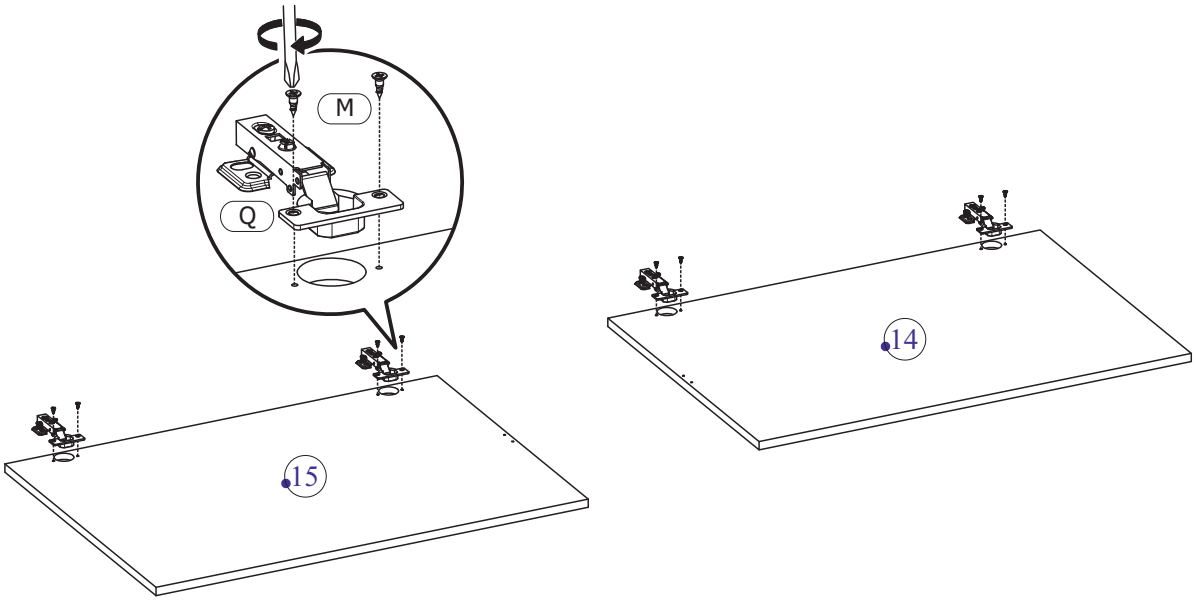
M
Q
15
14

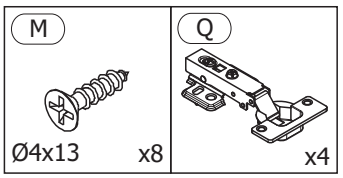
M
Ø4x13
x8
Q
x4

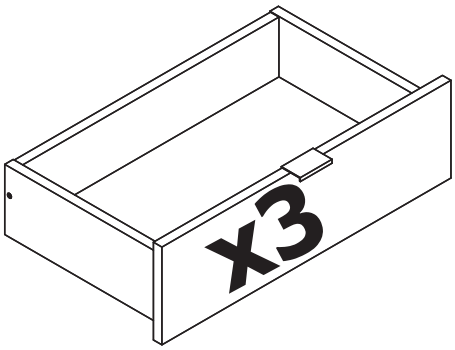

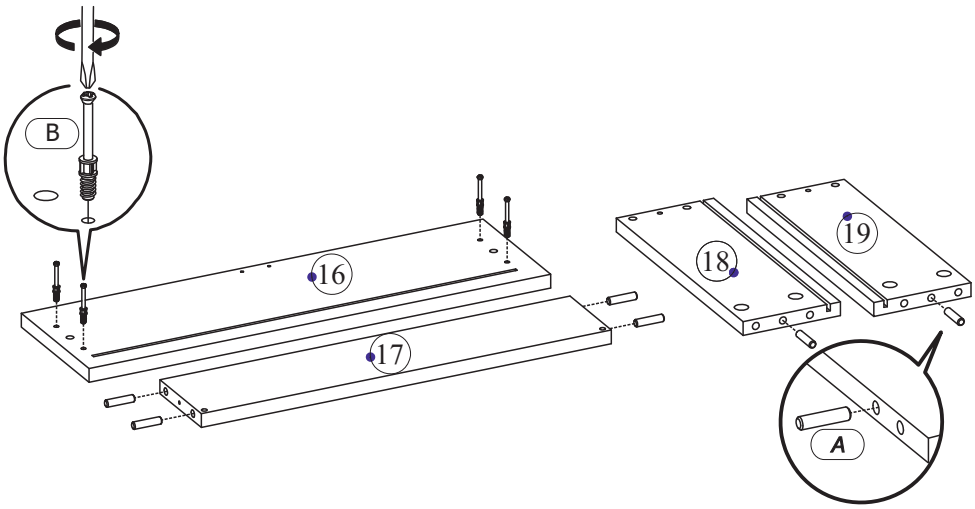

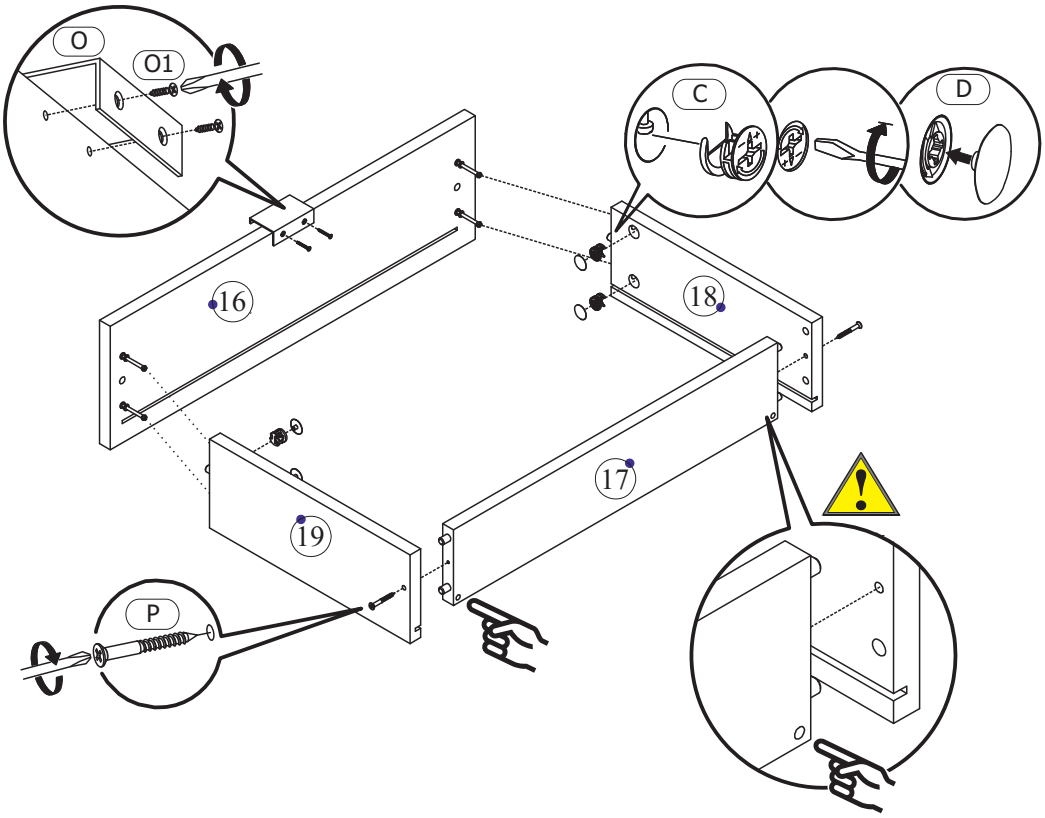

P Ø4x35 x6	
O x3	O1 Ø3x16 x6
B Ø7x45 x12	D Ø18 x12
C Ø15x12 x12	A Ø8x30 x18

19

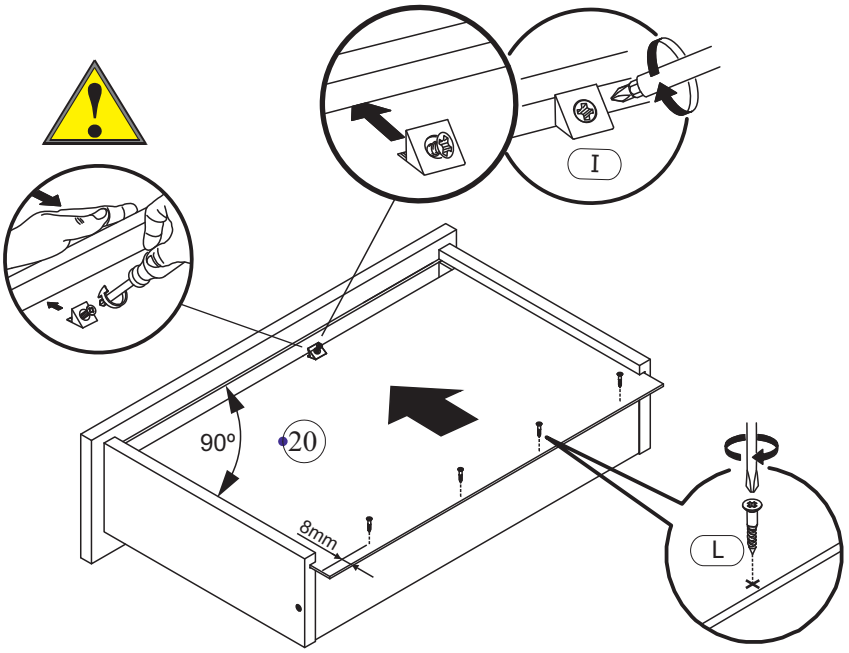
I
90°
20
8mm
L

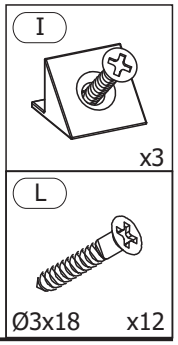
I
x3
L
Ø3x18
x12

20

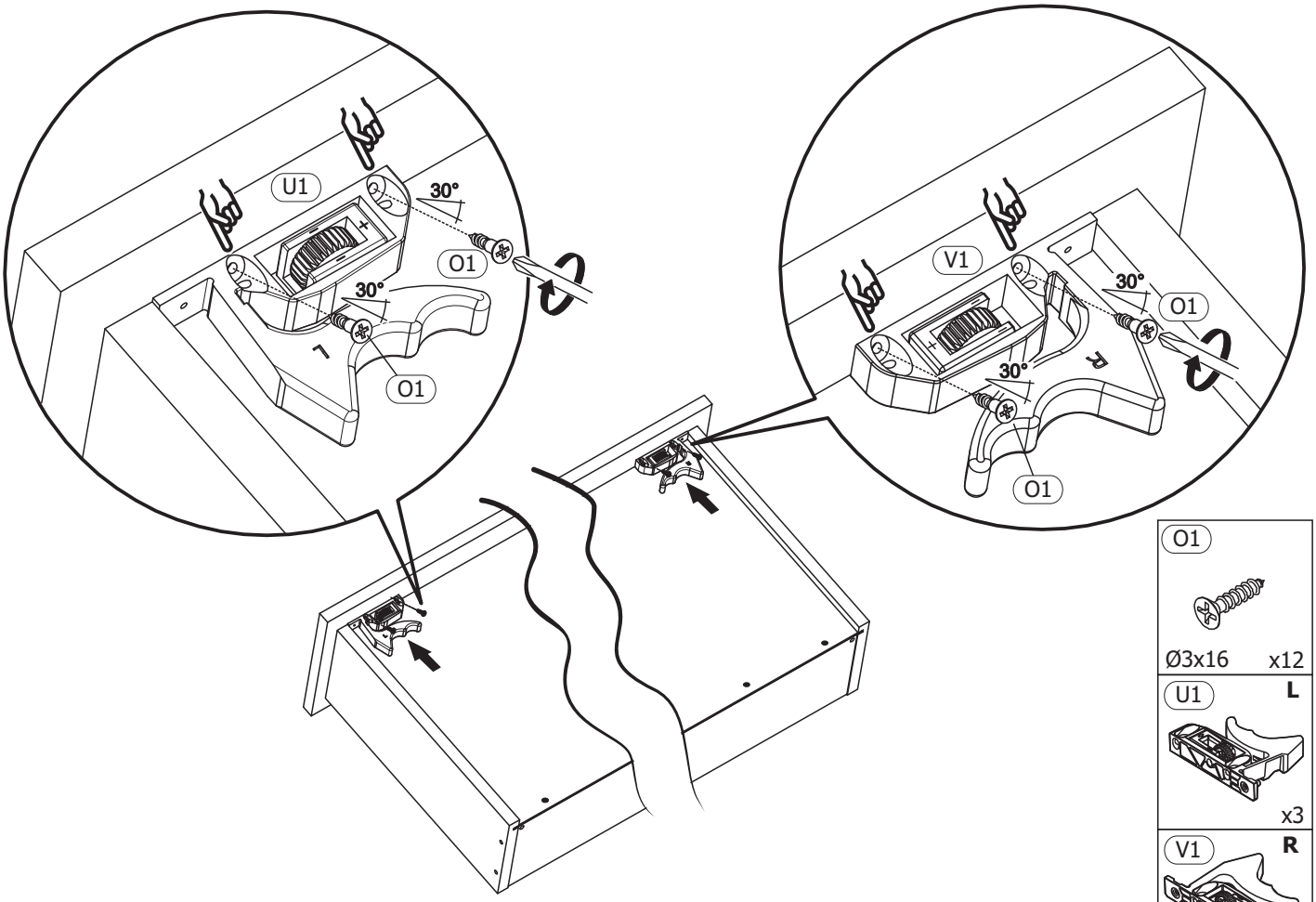
U1
30°
O1
30°
O1
V1
30°
O1
30°
O1
O1
Ø3x16
x12
U1
L
x3
V1
R
x3

21

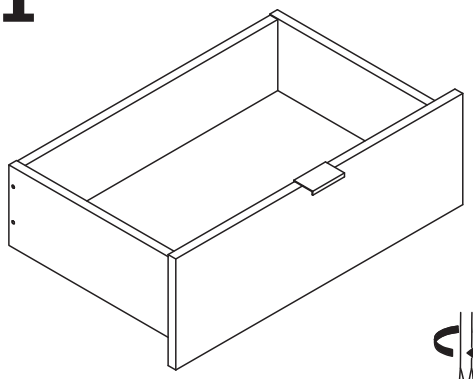

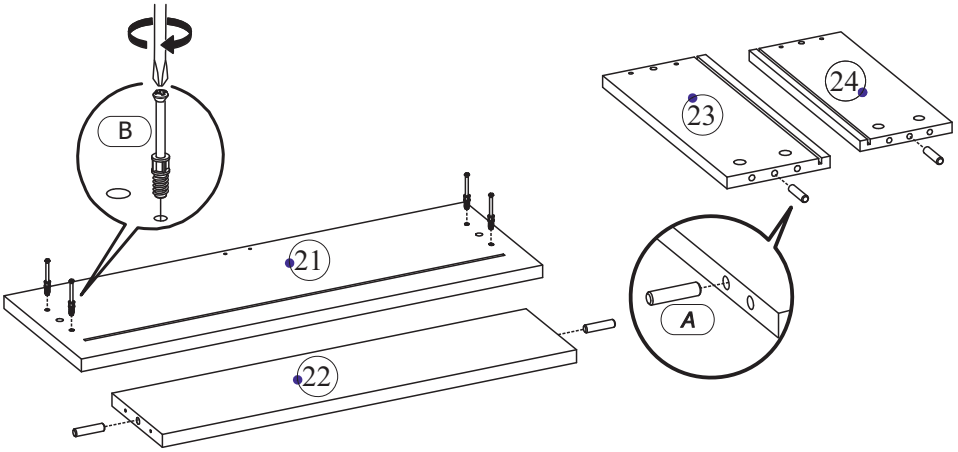

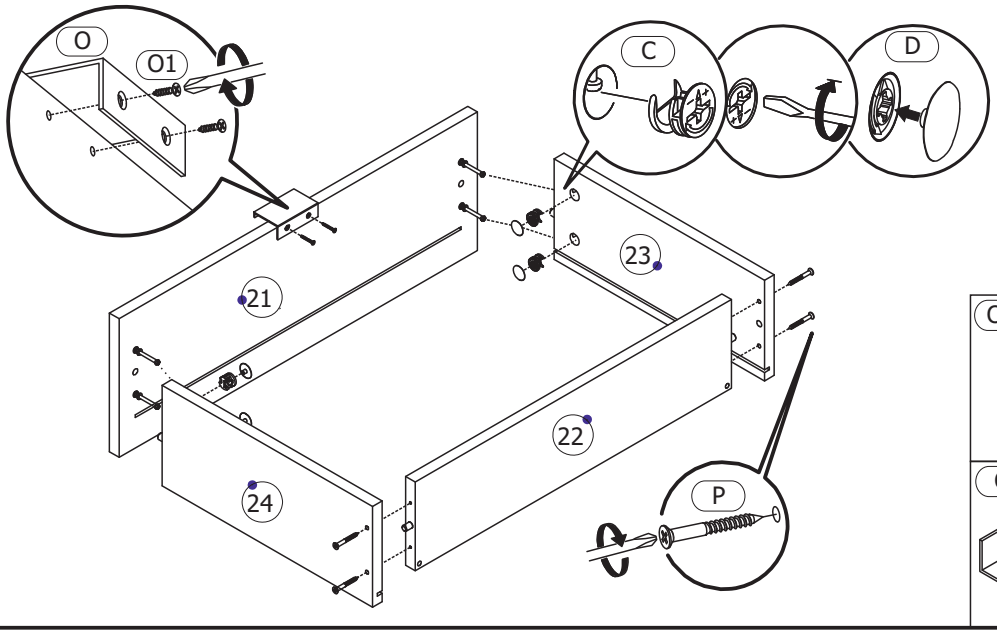

B Ø7x45	x4
C Ø15x12	x4
D Ø18	x4
O1 Ø3x16	x2
A Ø8x30	x4
O	x1
P Ø4x35	x4

22

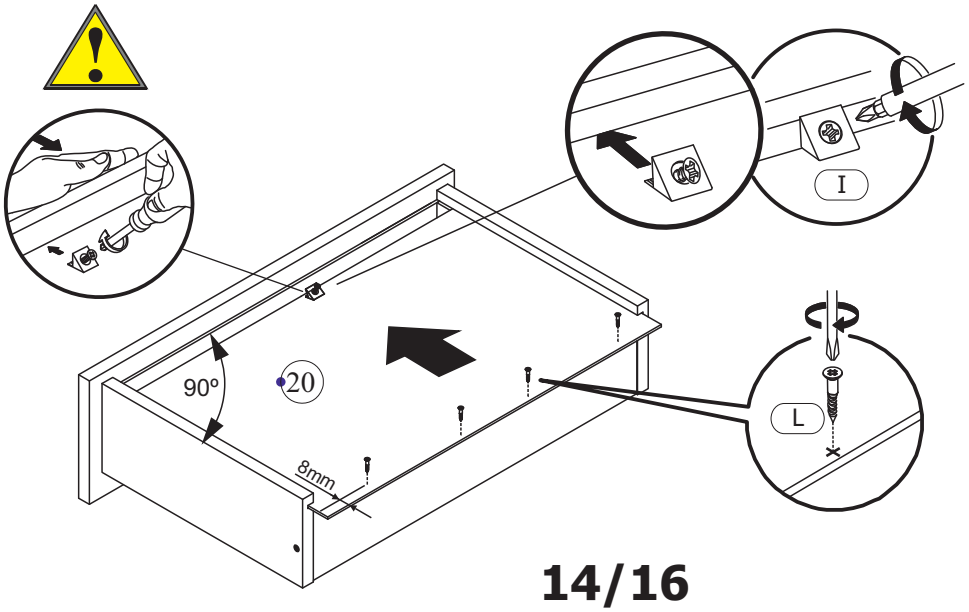

I	x1
L Ø3x18	x4

23

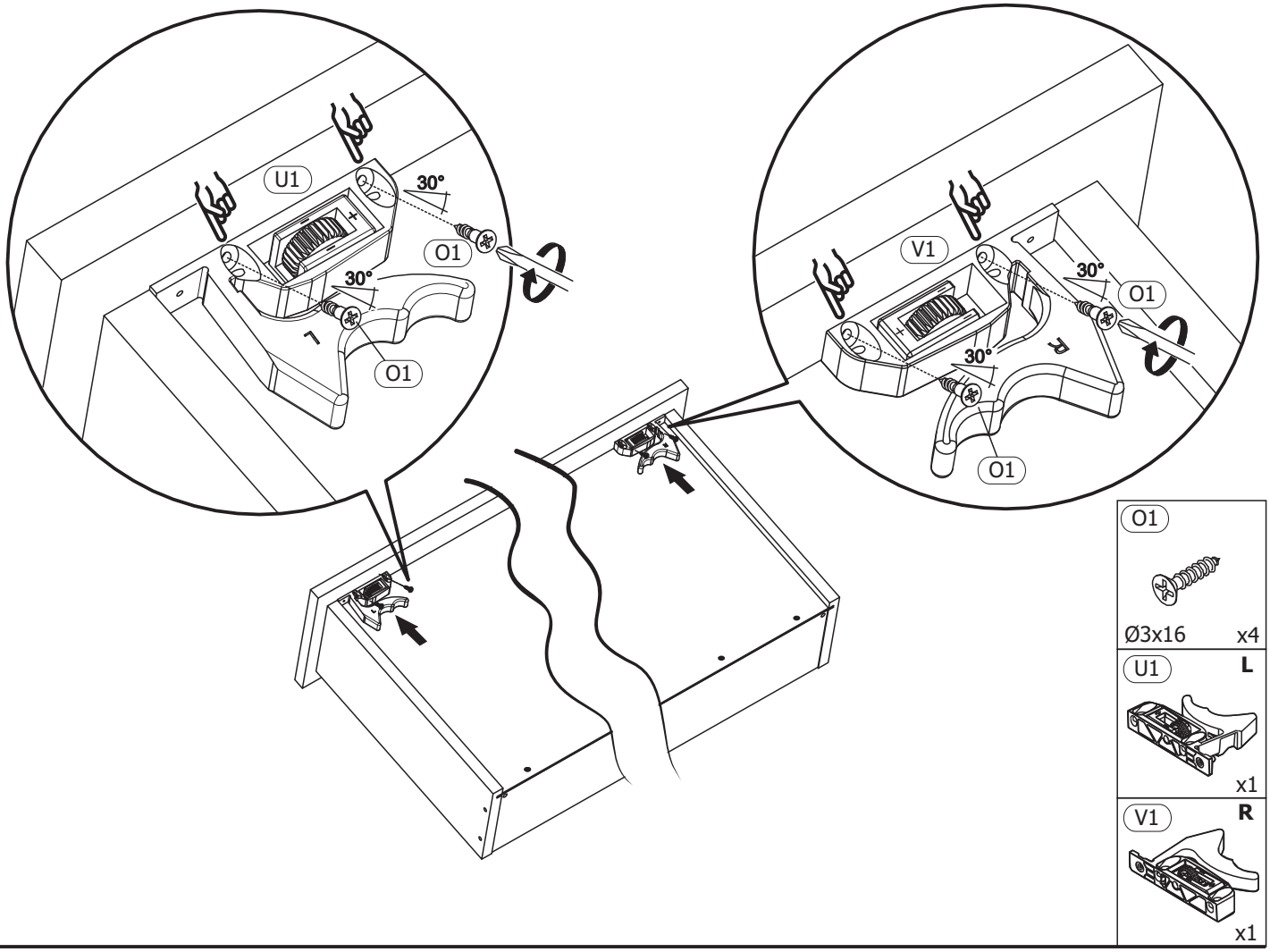
U1
30°
O1
30°
L
O1
V1
30°
O1
30°
R
O1
O1
Ø3x16
x4
U1
L
x1
V1
R
x1

24

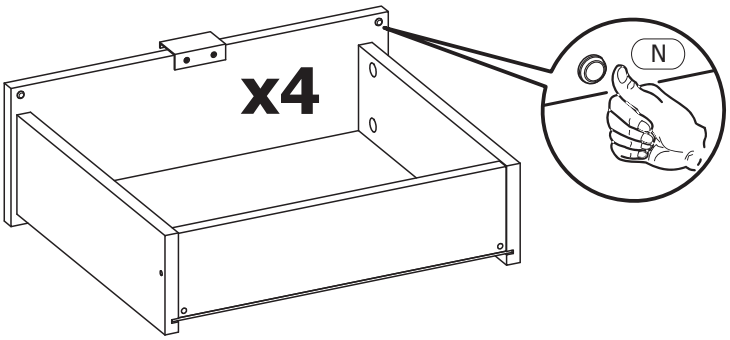
x4
N

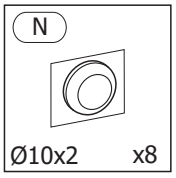
N
Ø10x2
x8

25

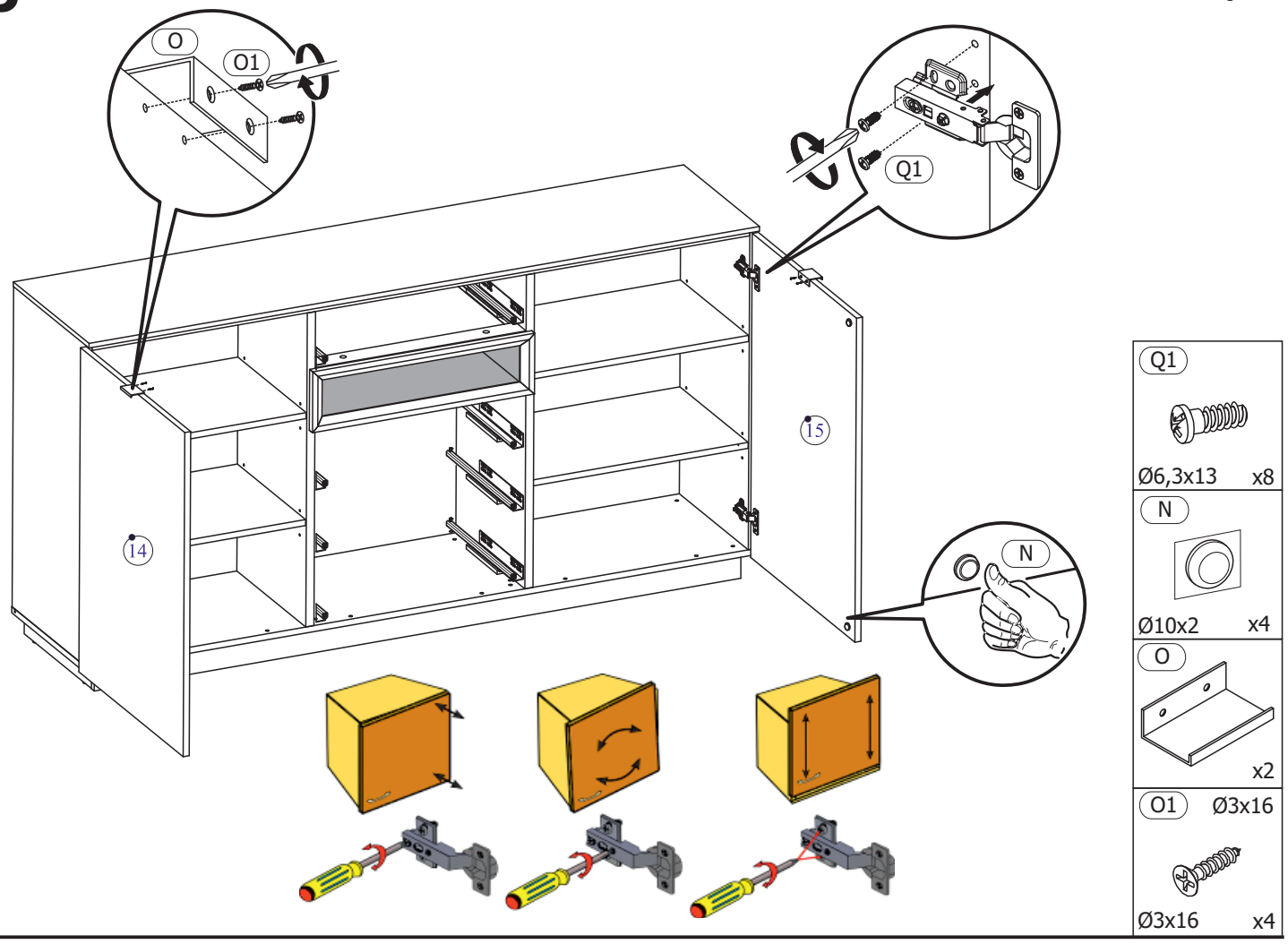
O
O1
Q1
14
15
N
Q1
Ø6,3x13 x8
N
Ø10x2 x4
O
x2
O1 Ø3x16
Ø3x16 x4

26

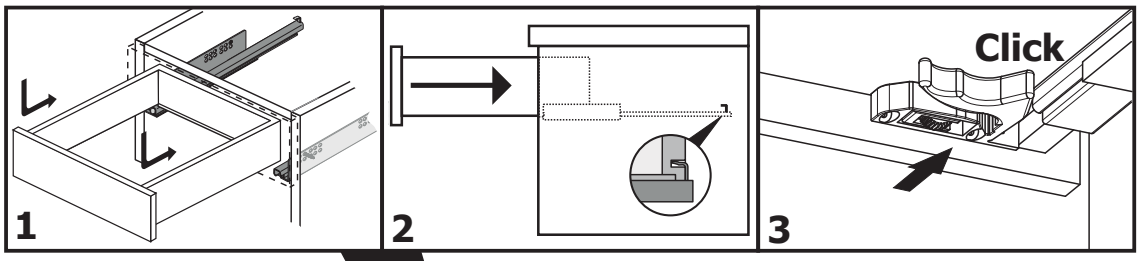
1
2
3
Click

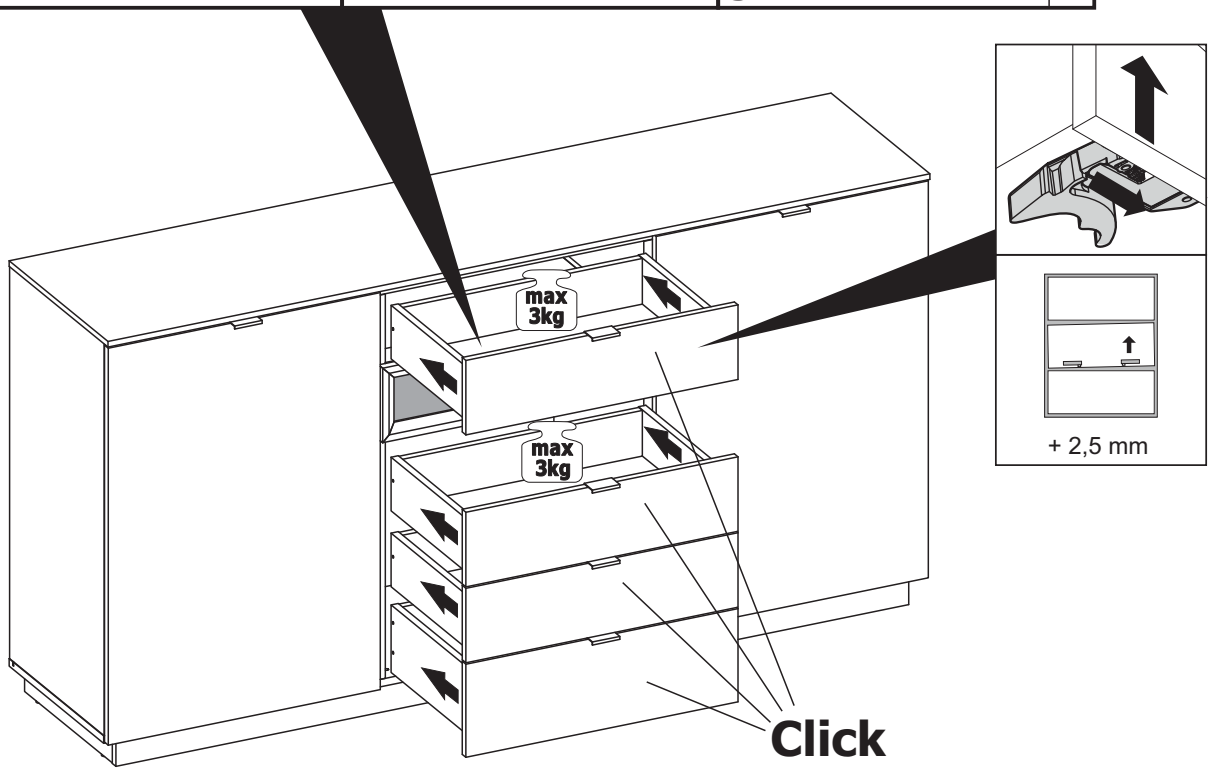
max 3kg
max 3kg
+ 2,5 mm
Click