Art No	Description
88888-XXX	SP-Von Staf Round Sofa Table -Screw Set
88888-XXX	SP-Von Staf Round Sofa Table -Plastic Feet

VENTURE DESIGN
HOME & INTERIOR

15604-588/15604-888

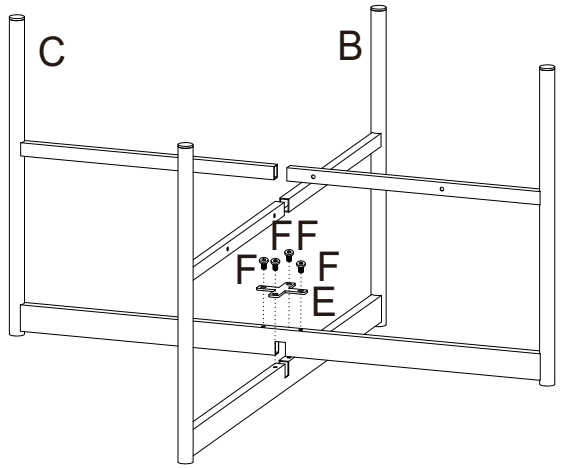

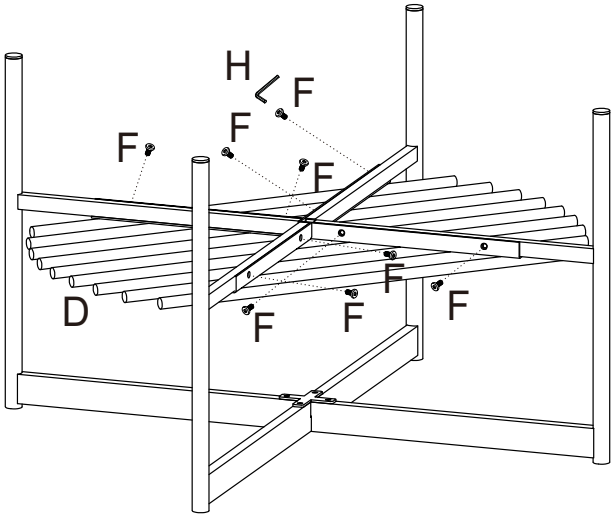

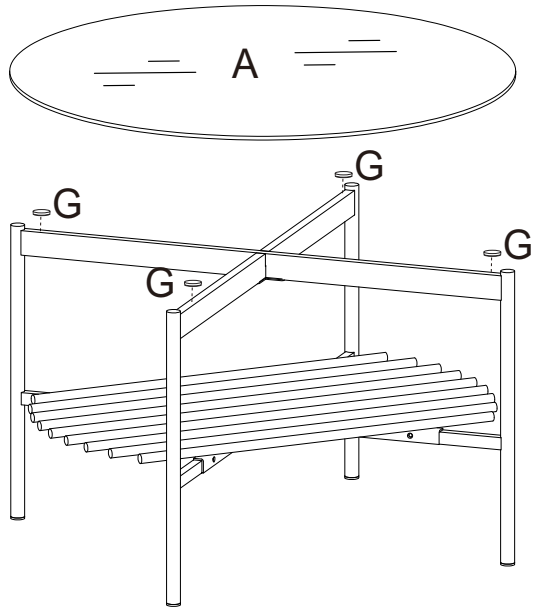

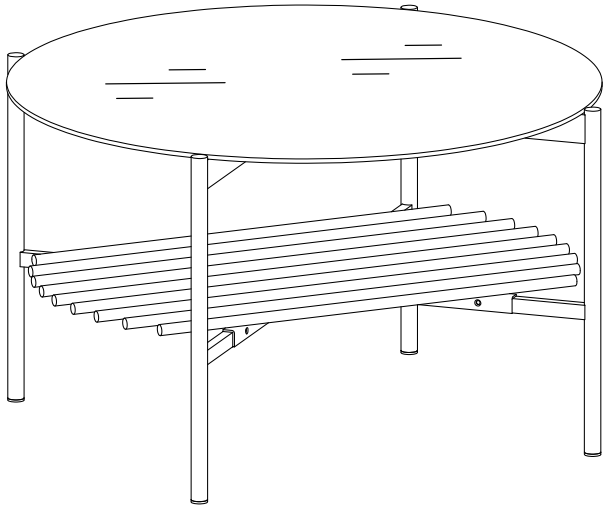

A	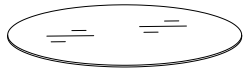	1	
B	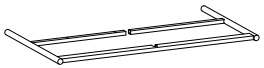	1	
C	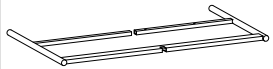	1	
D	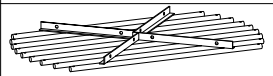	1	
E		1	
F		12	88888-XXX
G		4	88888-XXX
H		1	88888-XXX