07200007/01

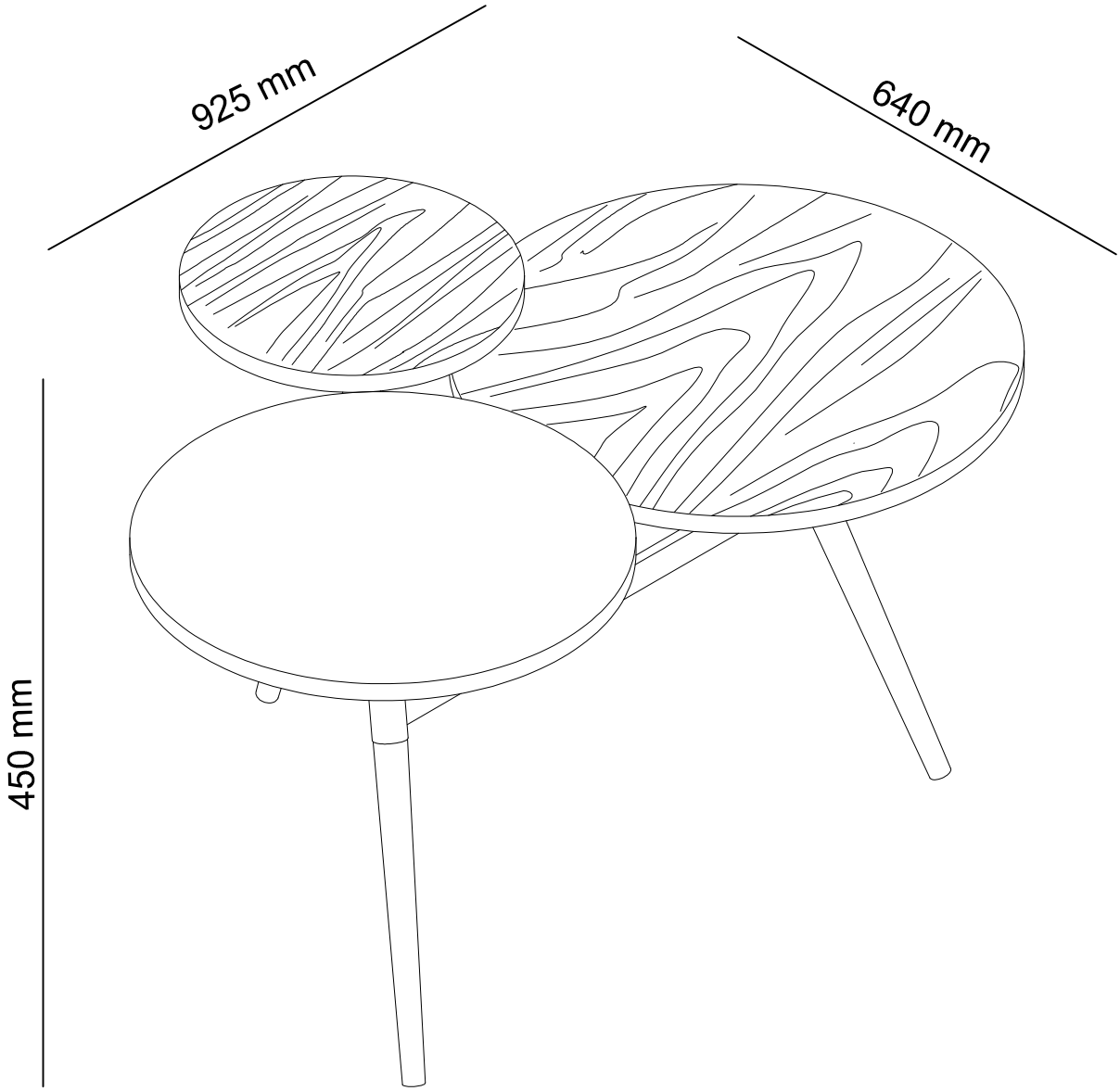

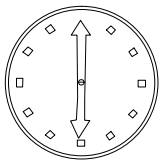

30 min

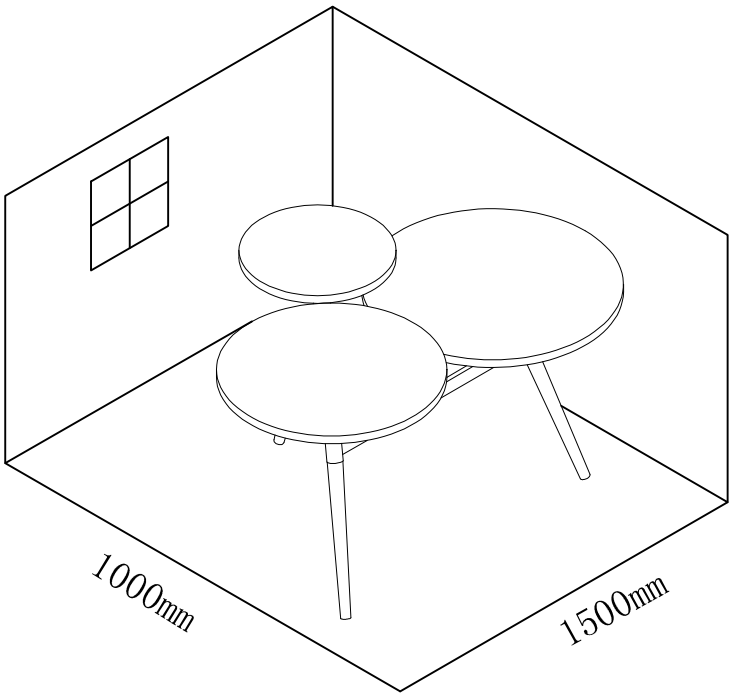

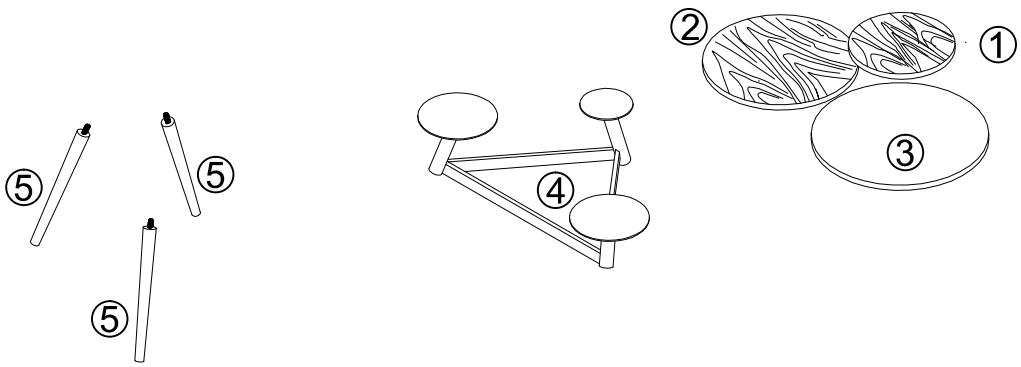

①	1	300x300x18 mm
②	1	440x440x18 mm
③	1	500x500x18mm
④	1	663x382x187mm
⑤	3	310x30x30mm

AX12 Ø6x12mm	BX1 M4	CX3 Ø15x3mm

1

AX12 Ø6x12mm	BX1 M4

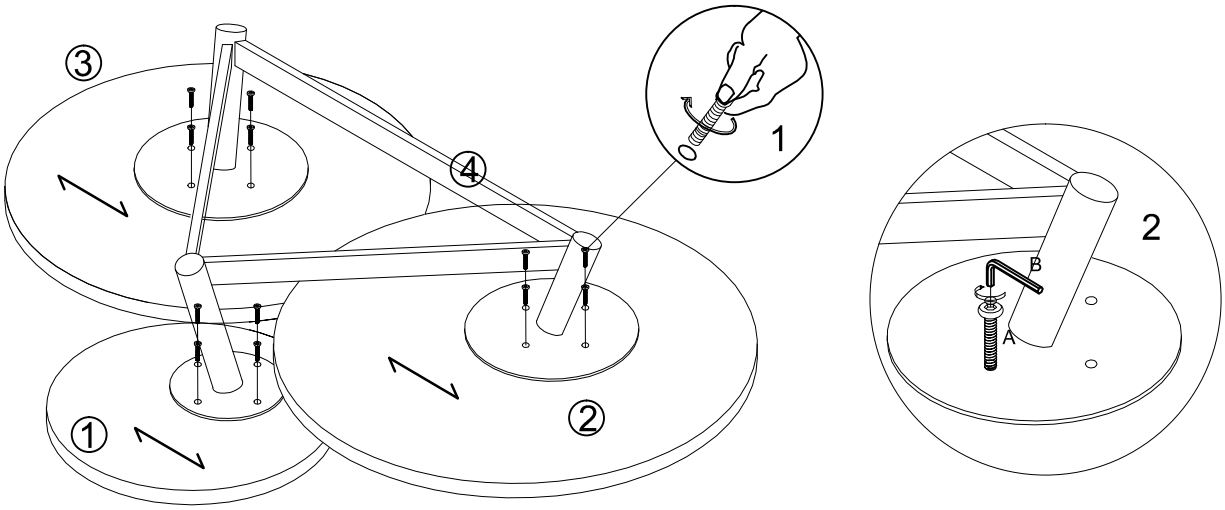

2

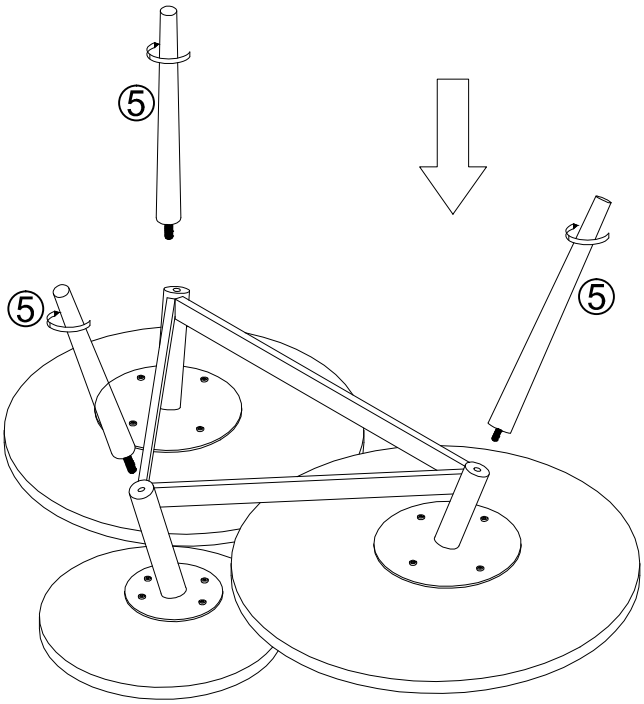

3

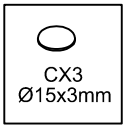

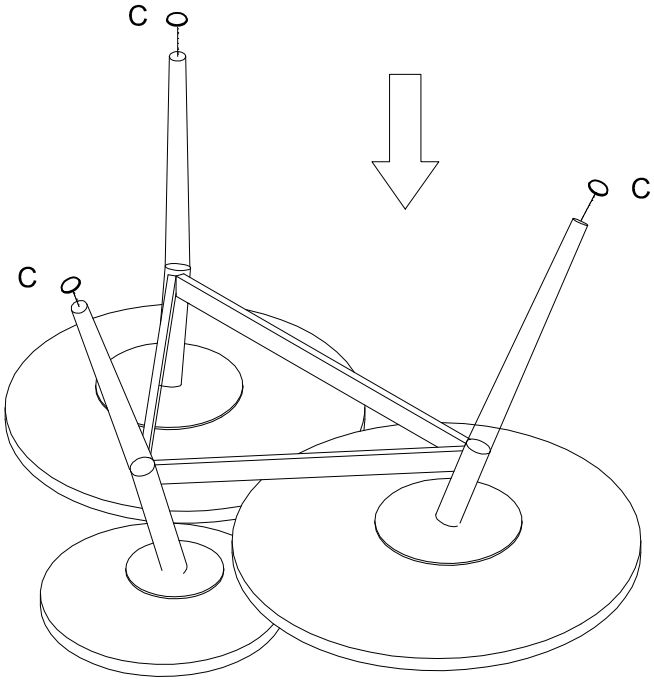
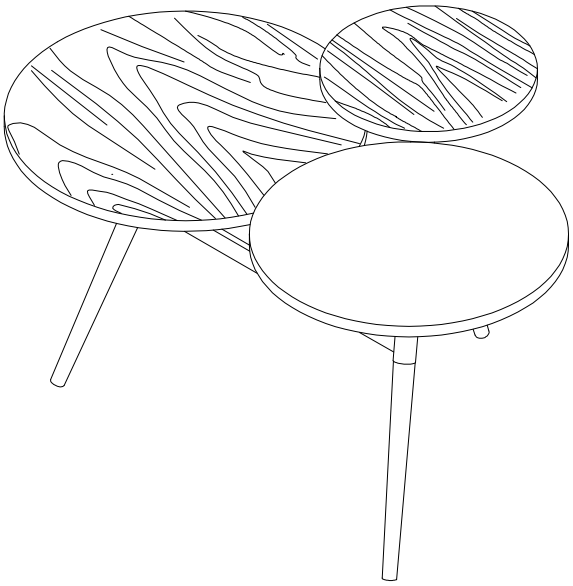
4