07200020-01

Assembly Instructions

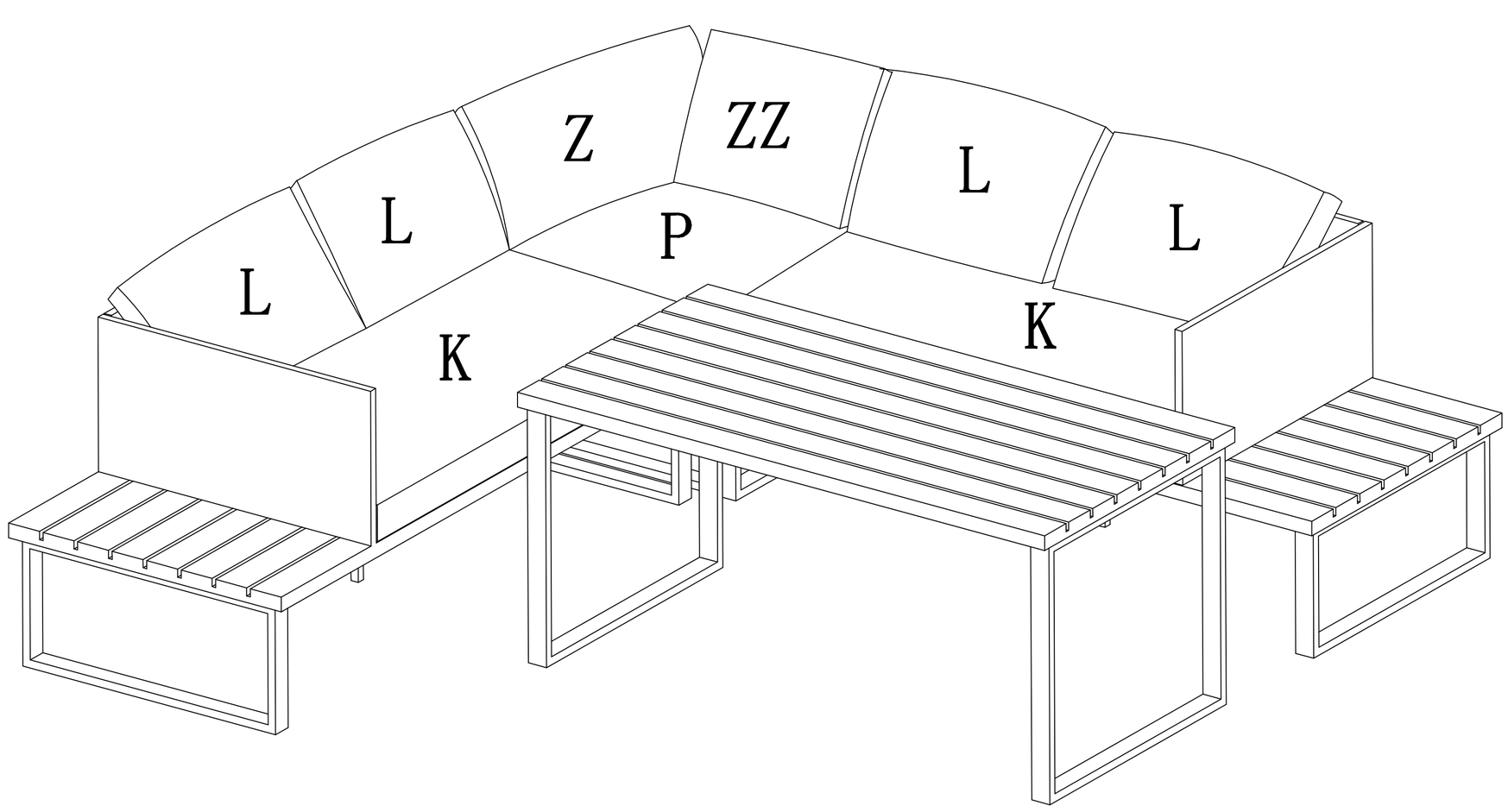

M6*20mm	A	7 pcs	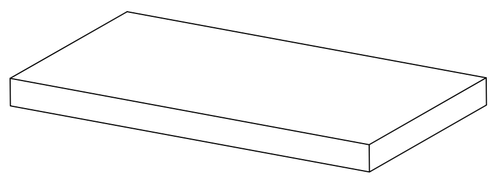	K	2 pcs
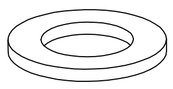	D	7 pcs	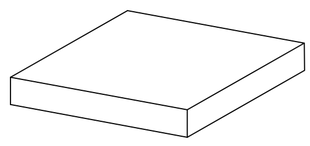	P	1 pc
	E	1 pc	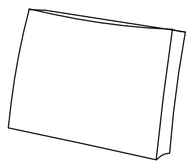	L	4 pcs
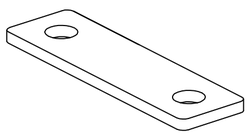	V	2 pcs	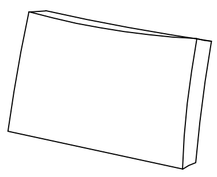	Z	1 pc
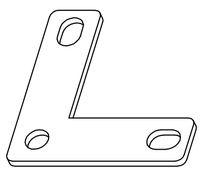	W	1 pc	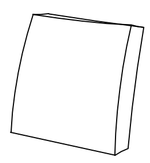	ZZ	1 pc
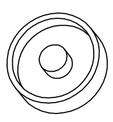	X	10 pcs			

Assembly Instructions

Step1:

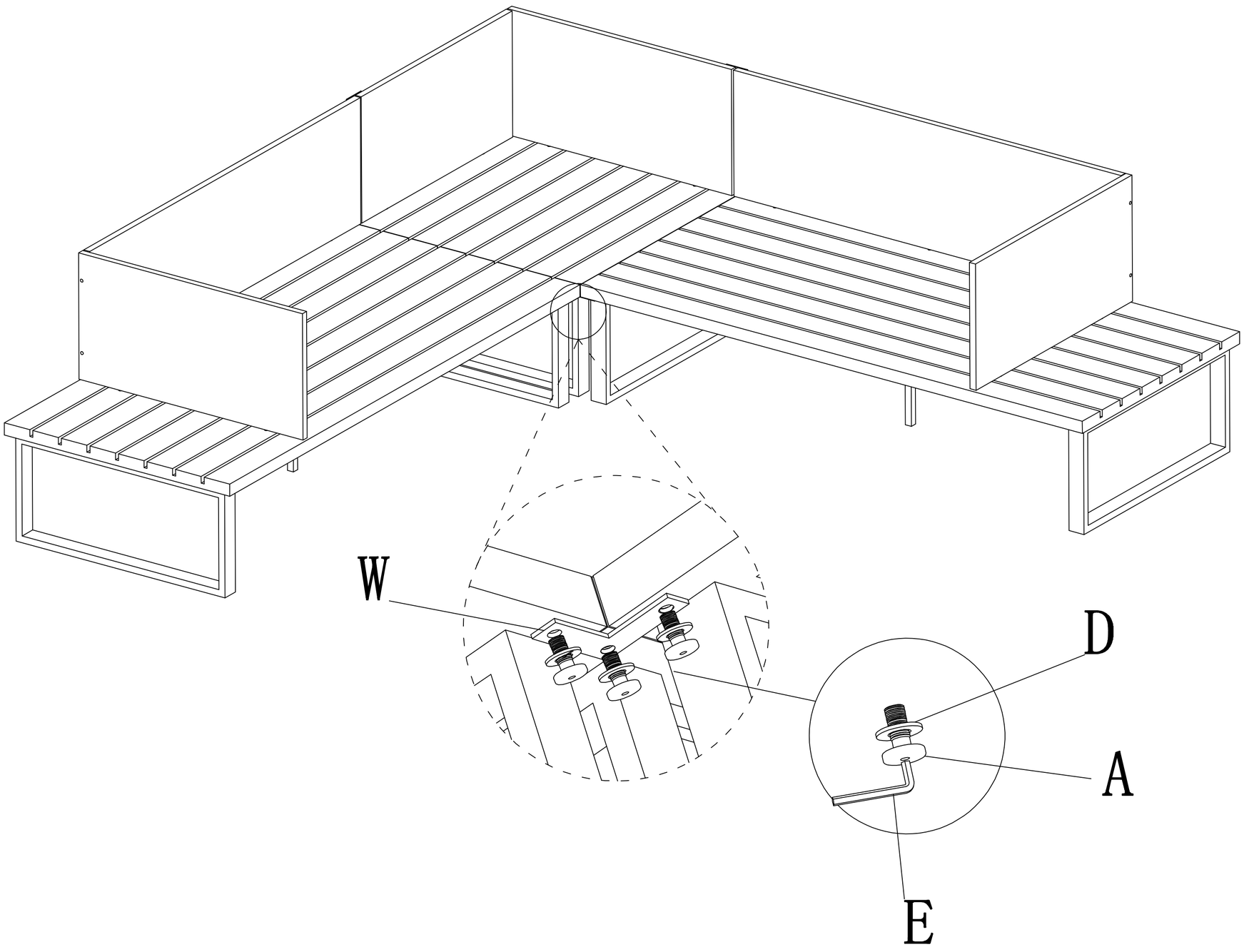

Step2:

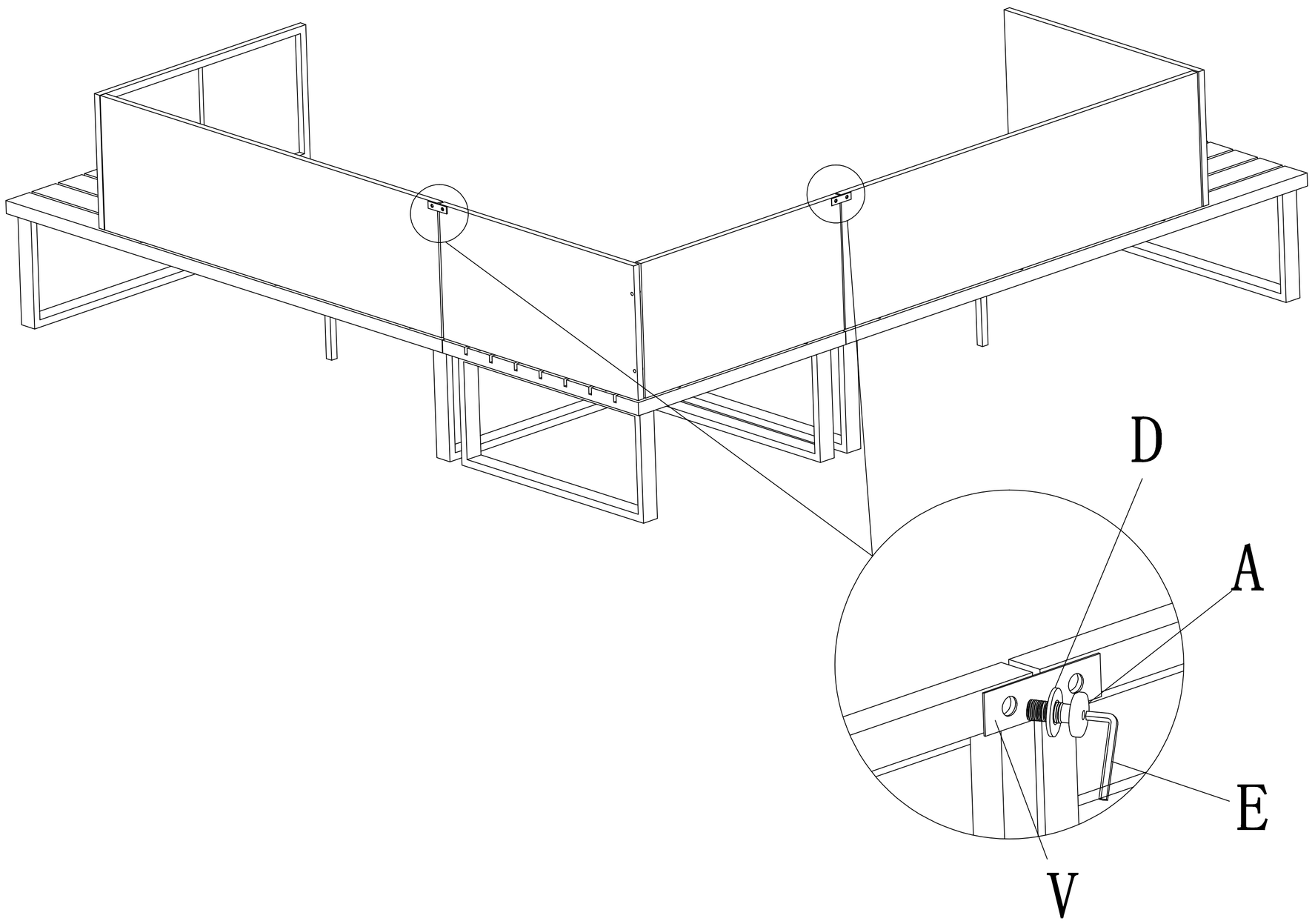

Assembly Instructions

Step3:

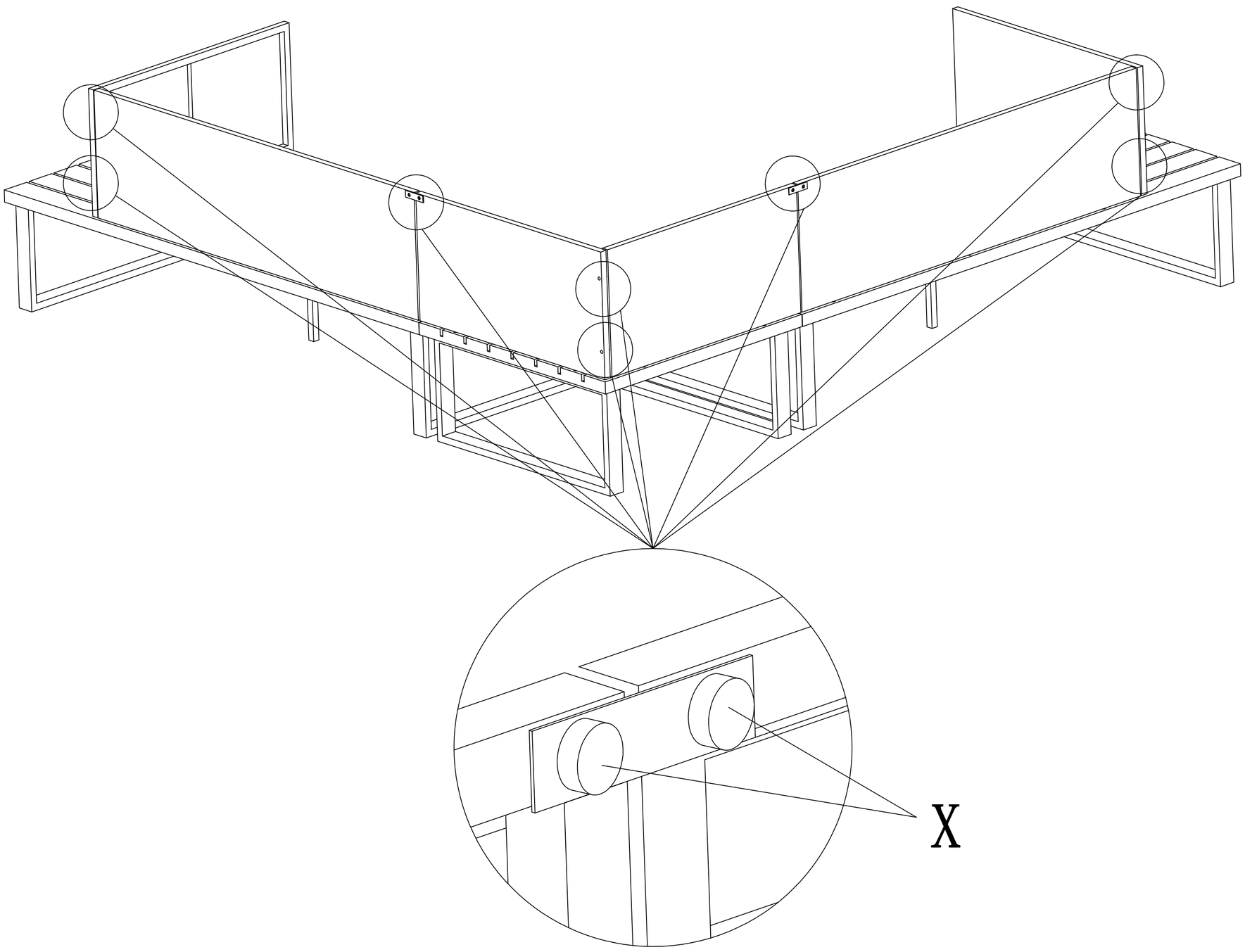
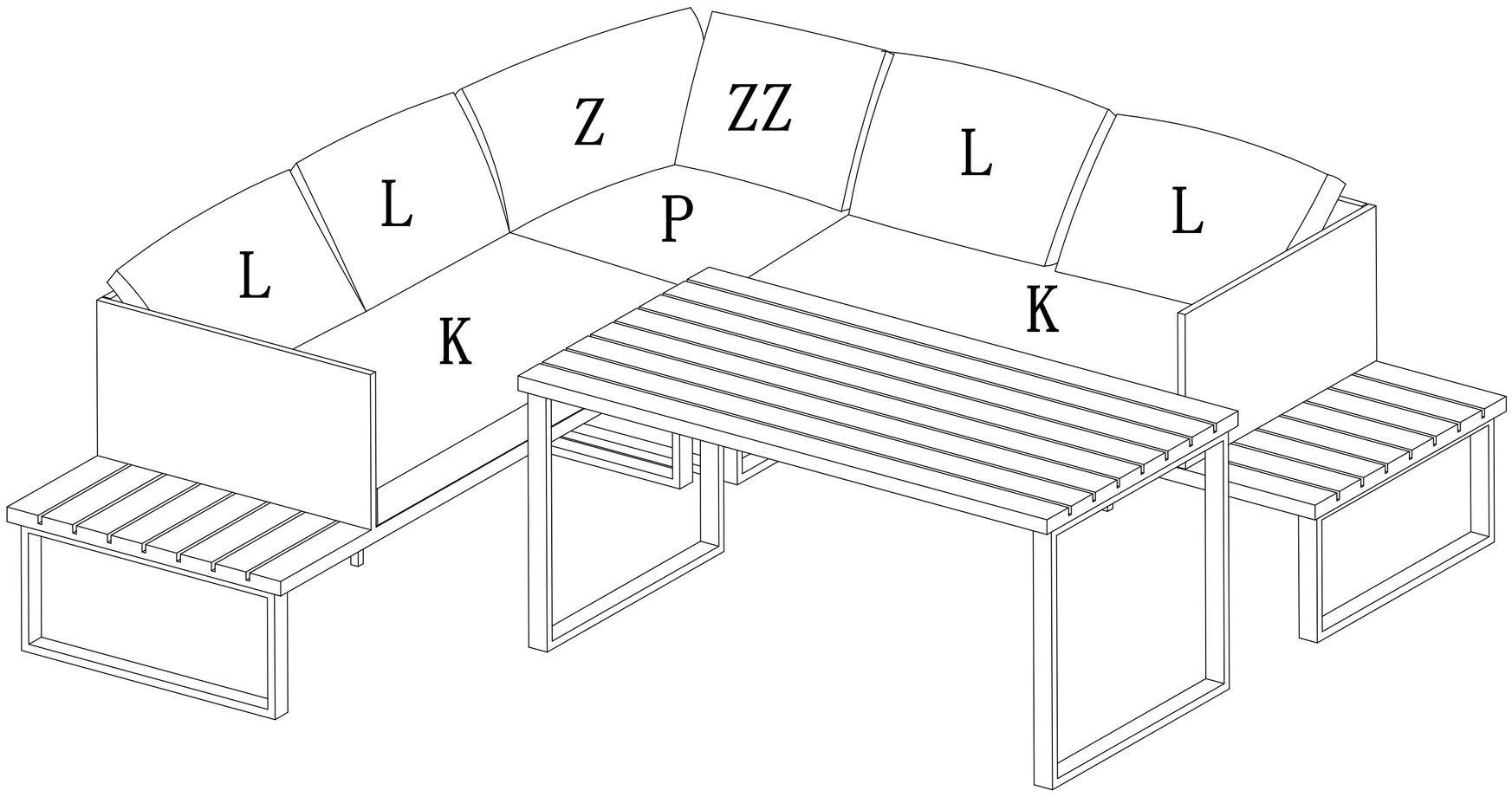
Step4: