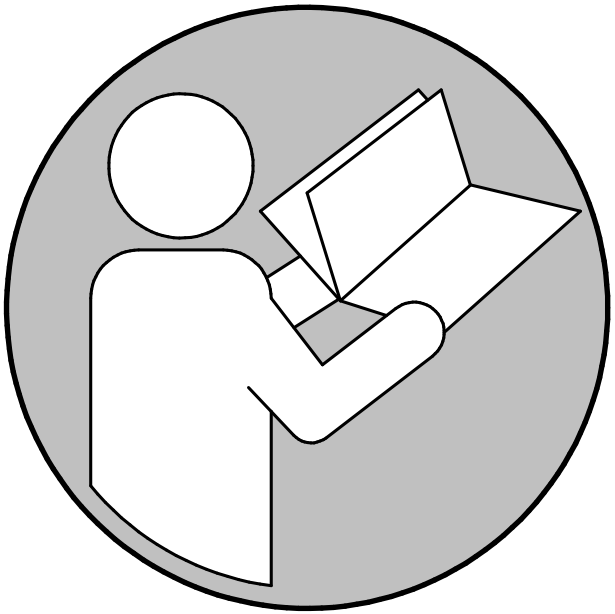

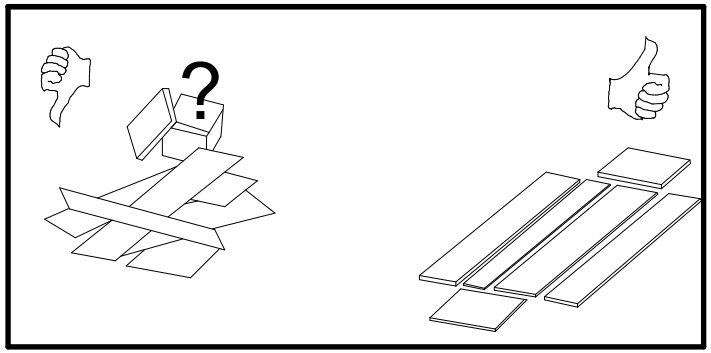
?

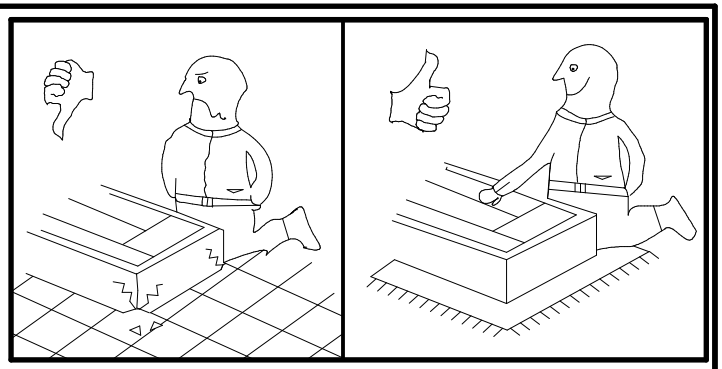

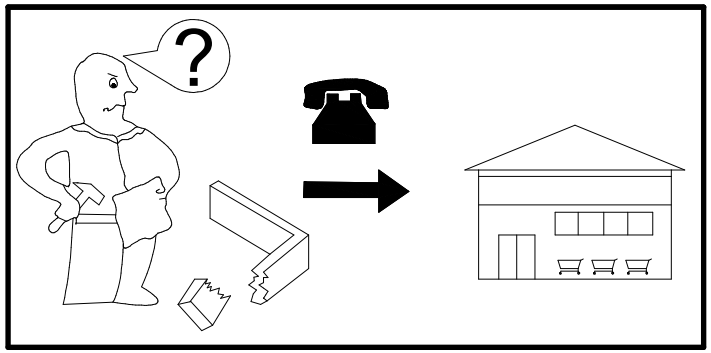
?

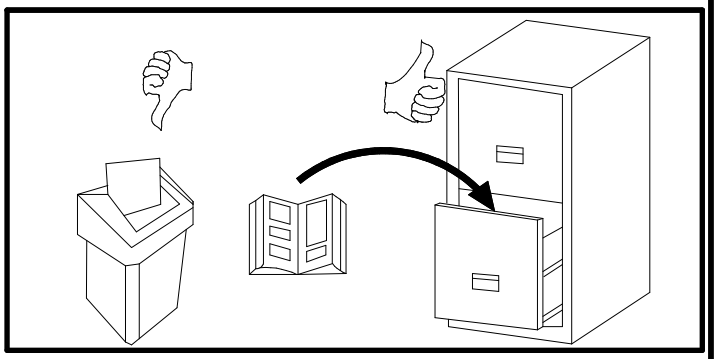

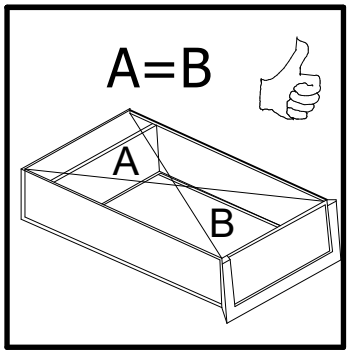
A=B
A
B

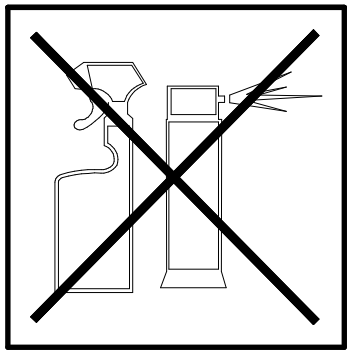

0-5

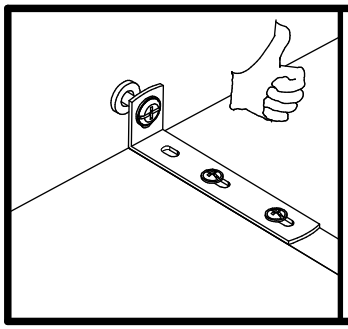

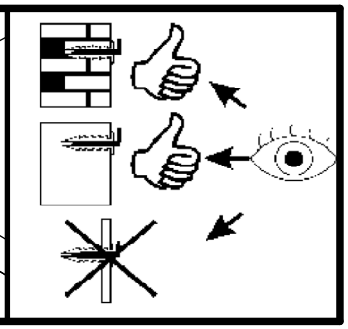

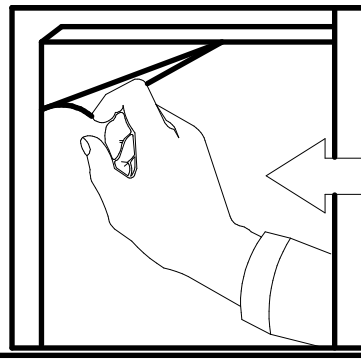

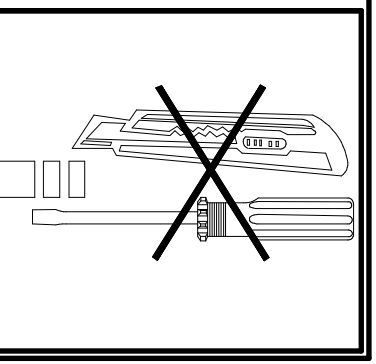

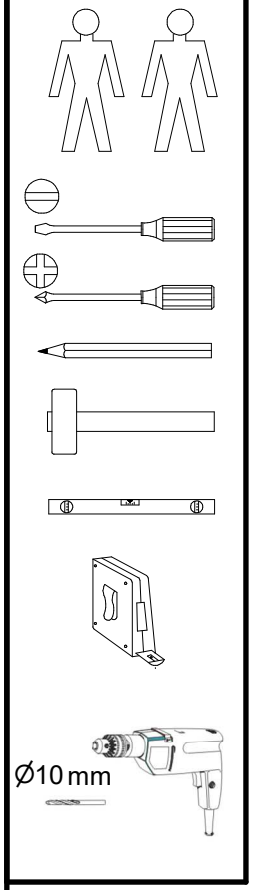

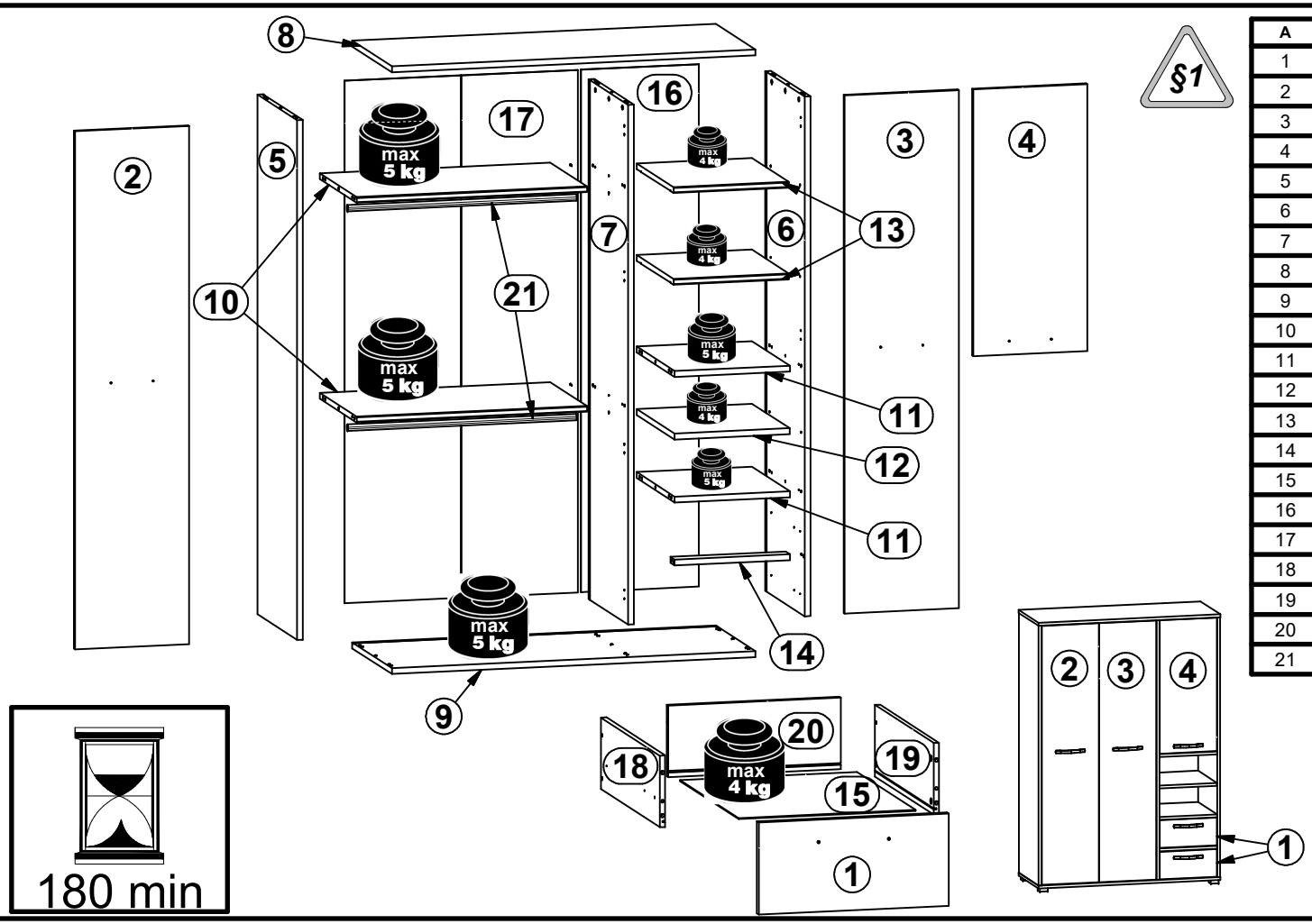

A	B	C (mm)		D
1	S387-0001	433	206	5/5
2	S387-0002	1930	433	5/5
3	S387-0003	1930	433	5/5
4	S387-0004	994	433	5/5
5	S387-1001	1936	560	3/5
6	S387-1002	1936	560	2/5
7	S387-1003	1936	560	4/5
8	S387-2001	1380	561	2/5
9	S387-2002	1380	561	3/5
10	S387-3001	874	522	4/5
11	S387-3002	438	539	2/5 , 3/5
12	S387-3003	437	534	1/5
13	S387-3004	437	522	1/5
14	S387-4001	438	60	1/5
15	S387-9001	403	497	1/5
16	S387-9002	1946	448	4/5
17	S387-9301	1946	885	4/5
18	ZK1-527	500	160	1/5
19	ZK1-528	500	160	1/5
20	ZS1-6574	393	160	1/5
21	dr-868	868	30	4/5

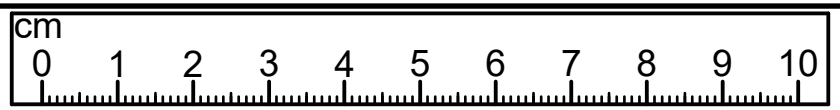

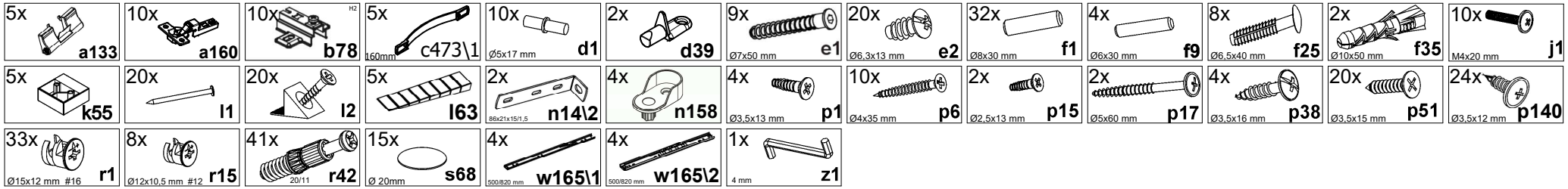

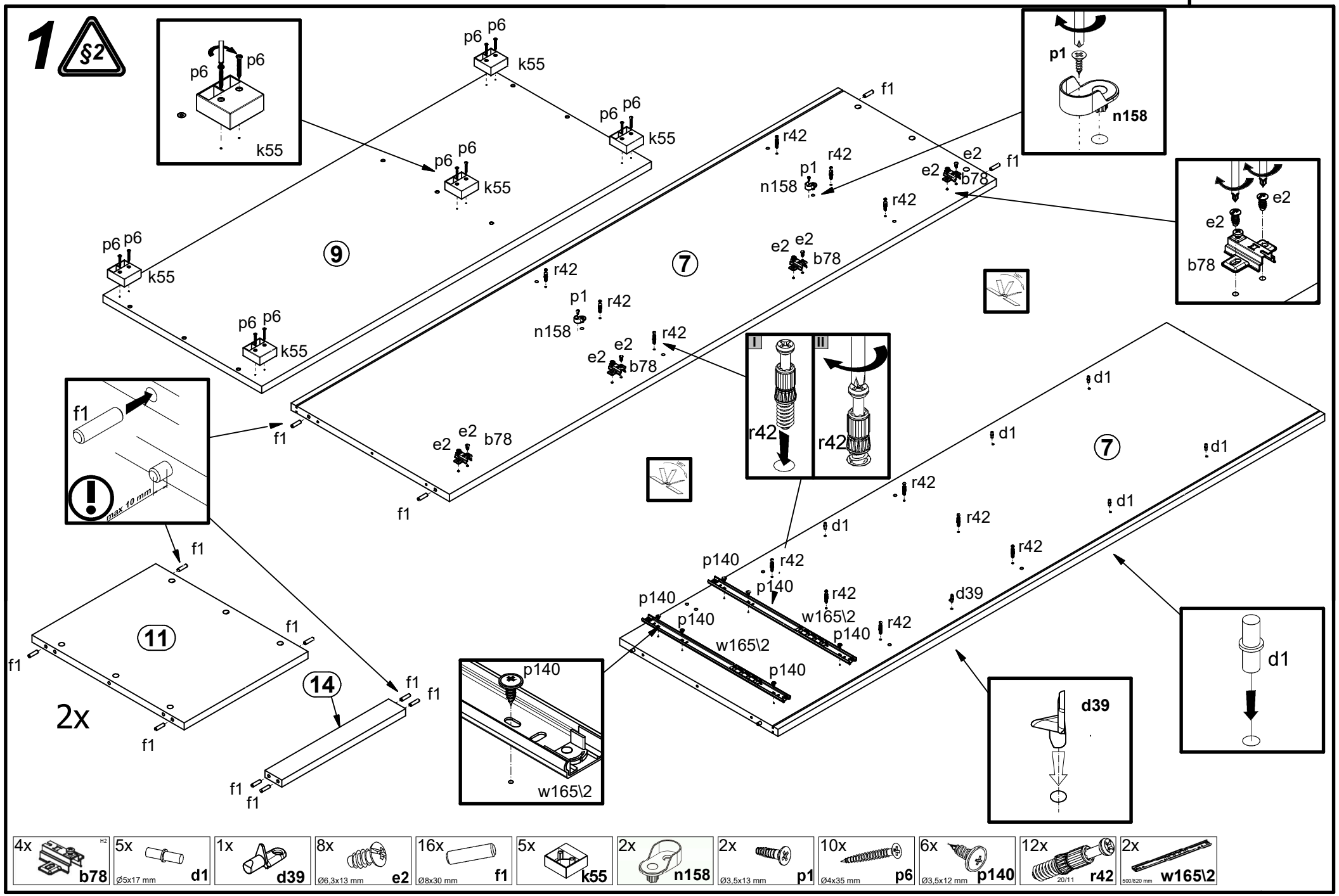
1
§2
p6
k55
9
7
11
14
p1
n158
r42
e2
b78
f1
d1
d39
p140
w165\2
max 10 mm
2x
4x b78
5x d1 Ø5x17 mm
1x d39
8x e2 Ø6,3x13 mm
16x f1 Ø8x30 mm
5x k55
2x n158
2x p1 Ø3,5x13 mm
10x p6 Ø4x35 mm
6x p140 Ø3,5x12 mm
12x r42
2x w165\2 500/820 mm

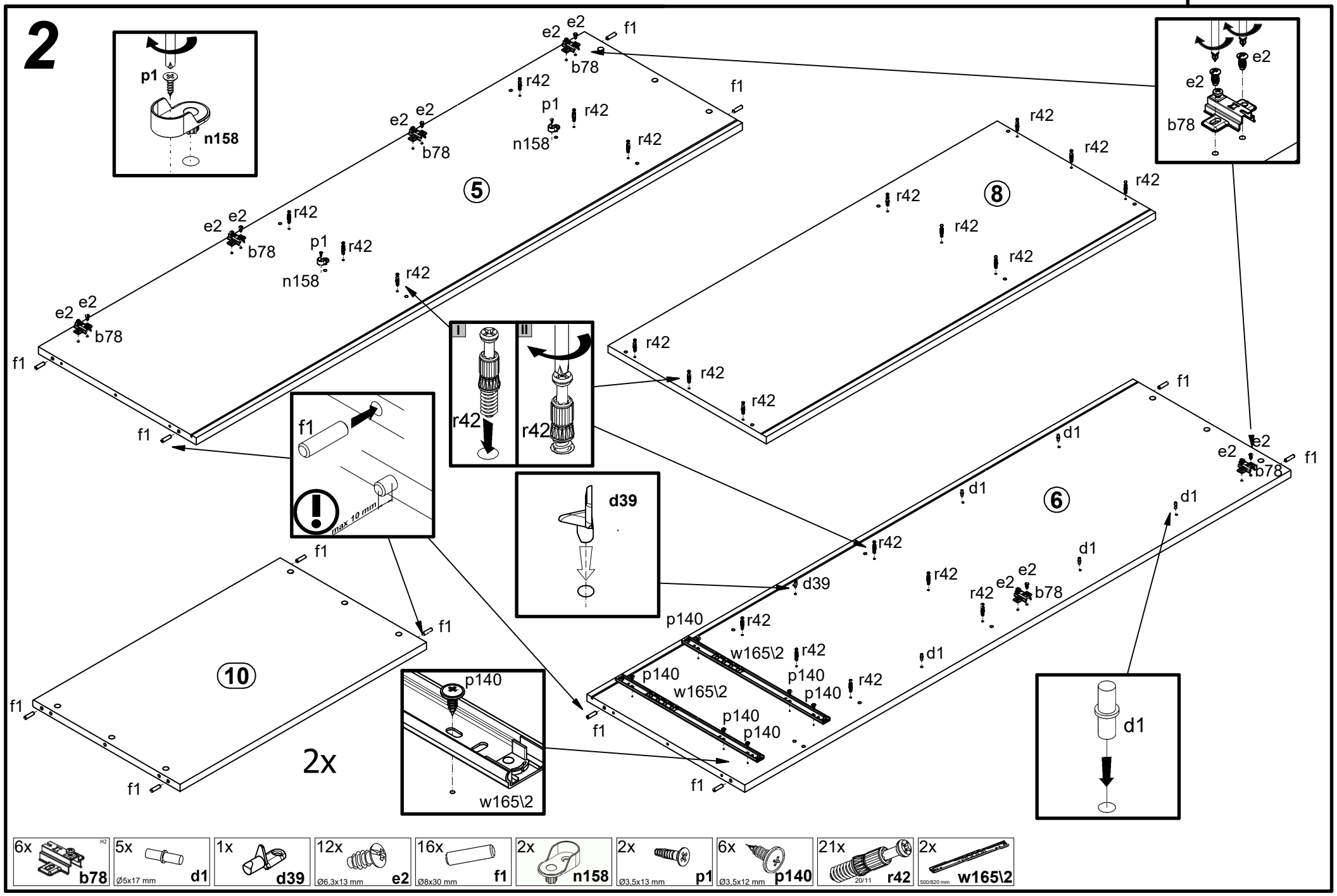

6x b78	5x d1 Ø5x17 mm	1x d39	12x e2 Ø6,3x13 mm	16x f1 Ø8x30 mm	2x n158	2x p1 Ø3,5x13 mm	6x p140 Ø3,5x12 mm	21x r42	2x w165\2 500/820 mm

3

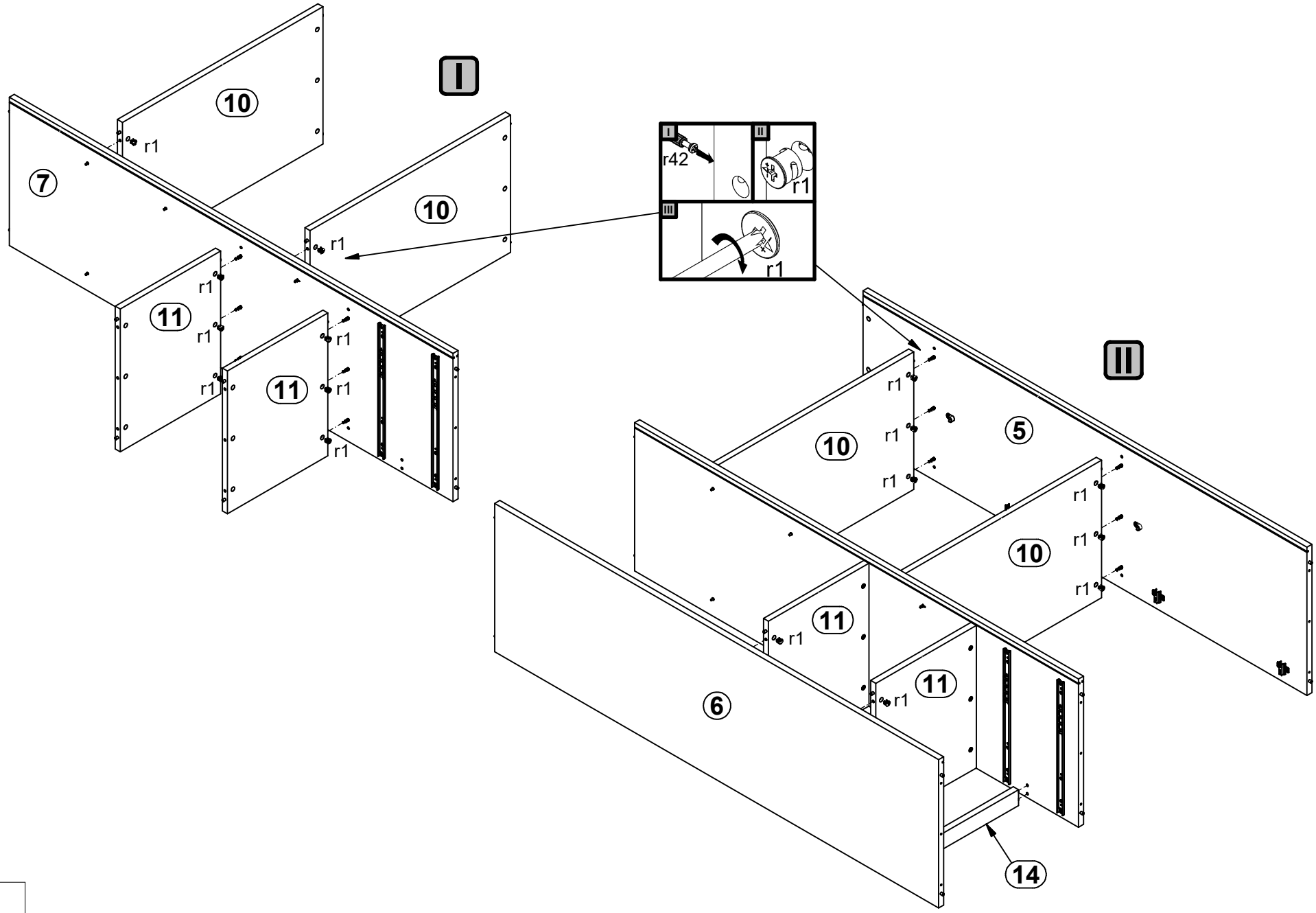

24x r1
Ø15x12 mm #16

4

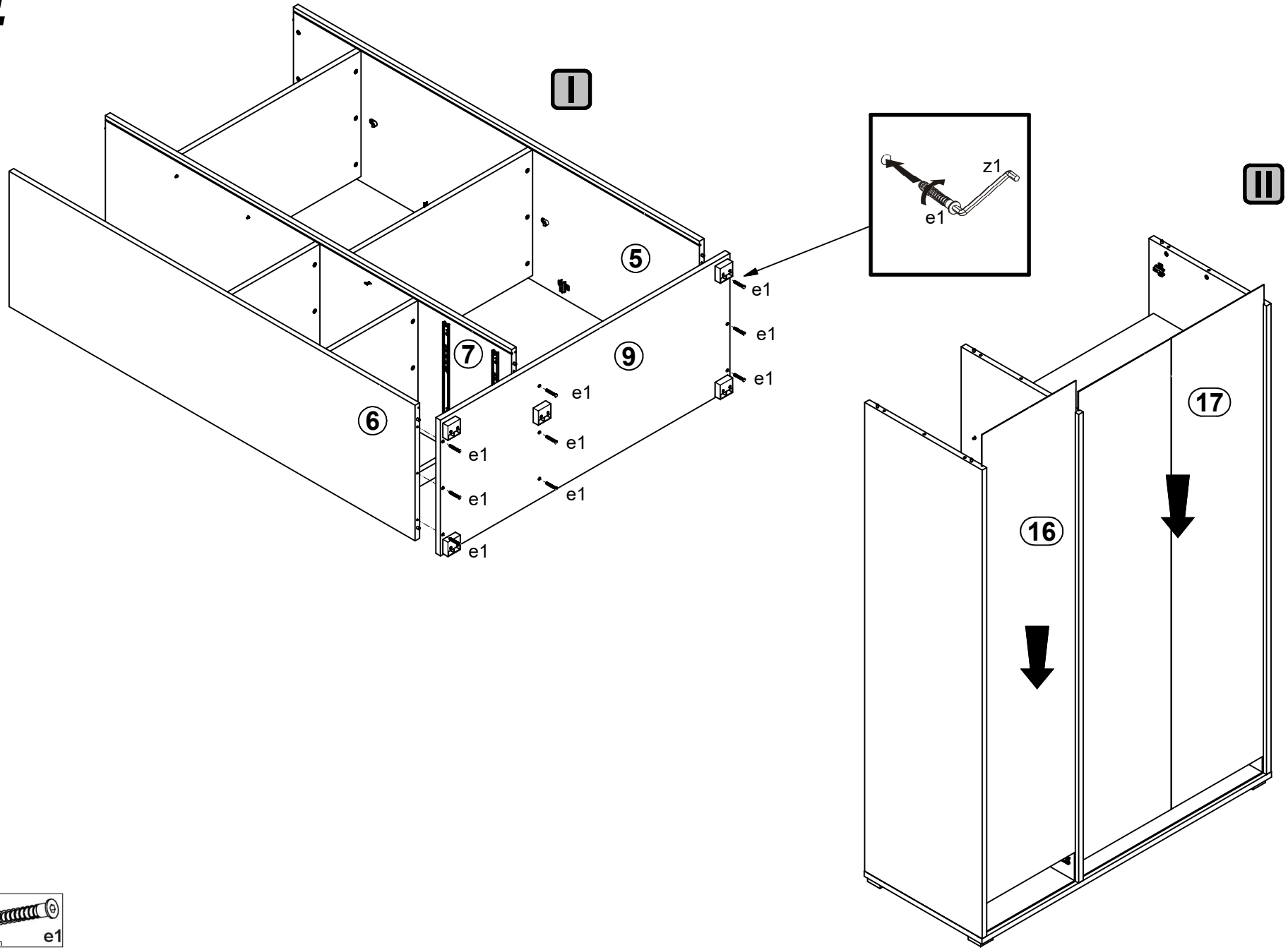

5

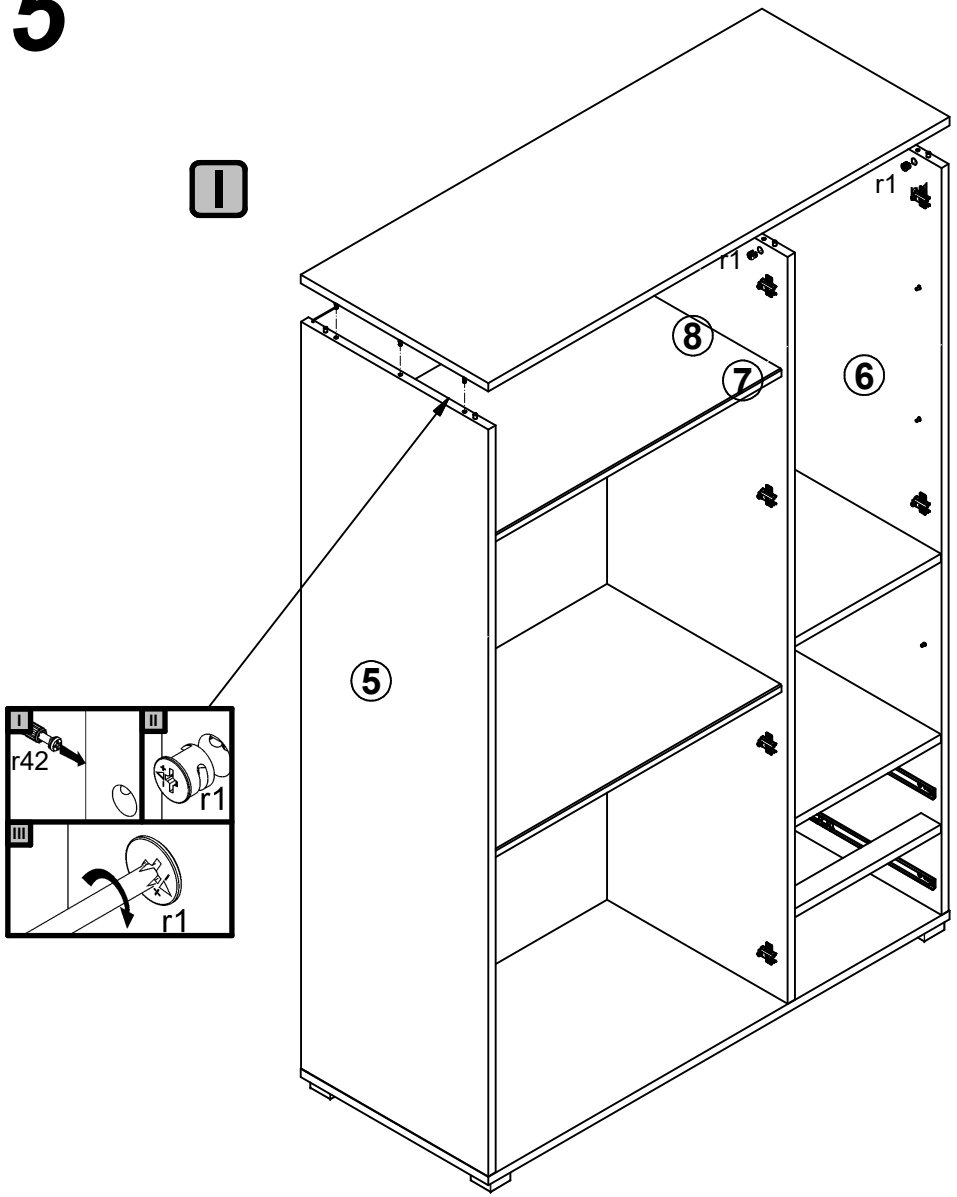
I
r1
r1
8
7
6
5
r42
r1
r1

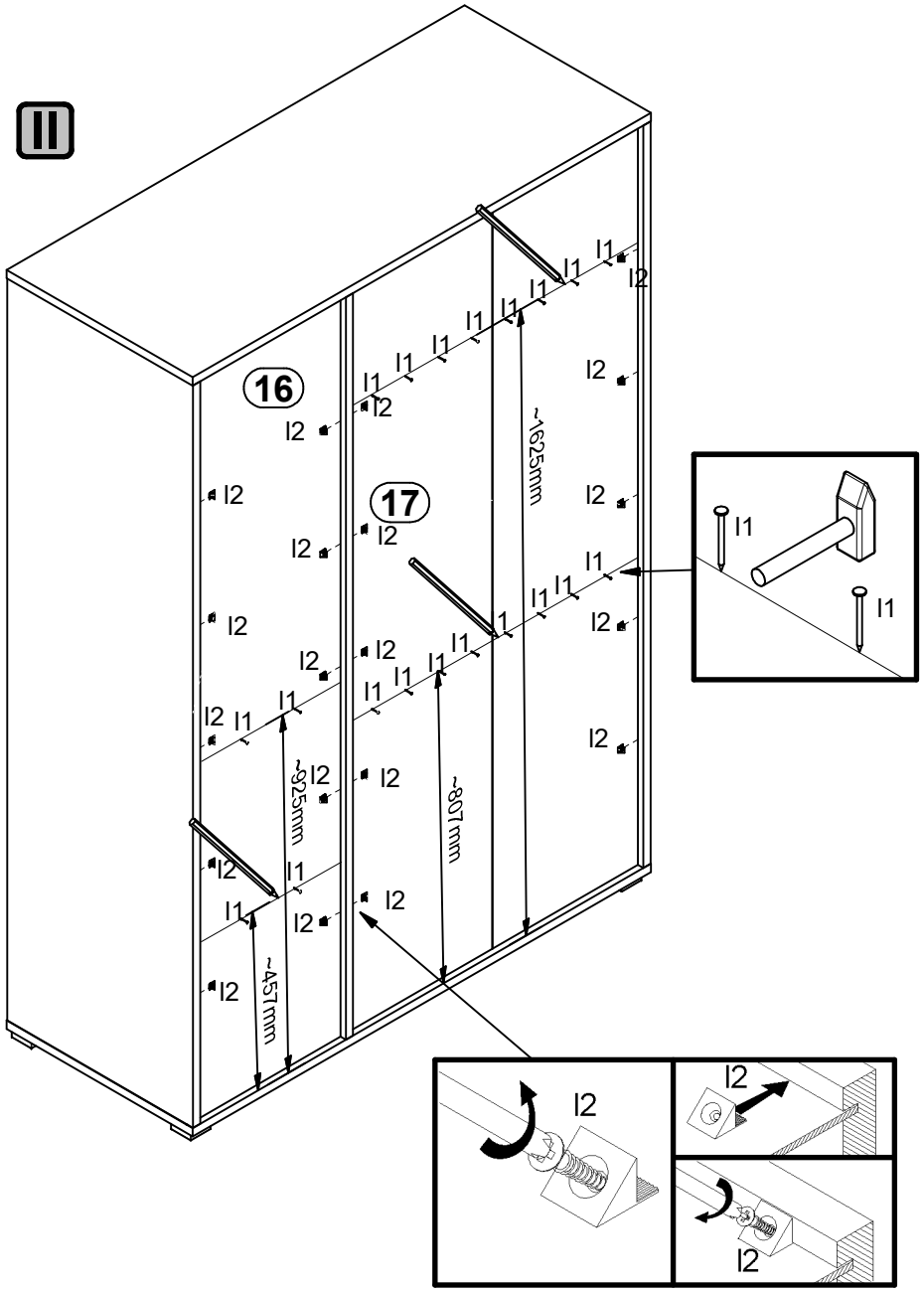
II
16
17
l1
l2
~1625mm
~807mm
~525mm
~457mm

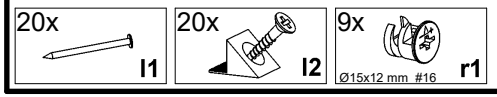
20x
l1
20x
l2
9x
Ø15x12 mm #16
r1

6

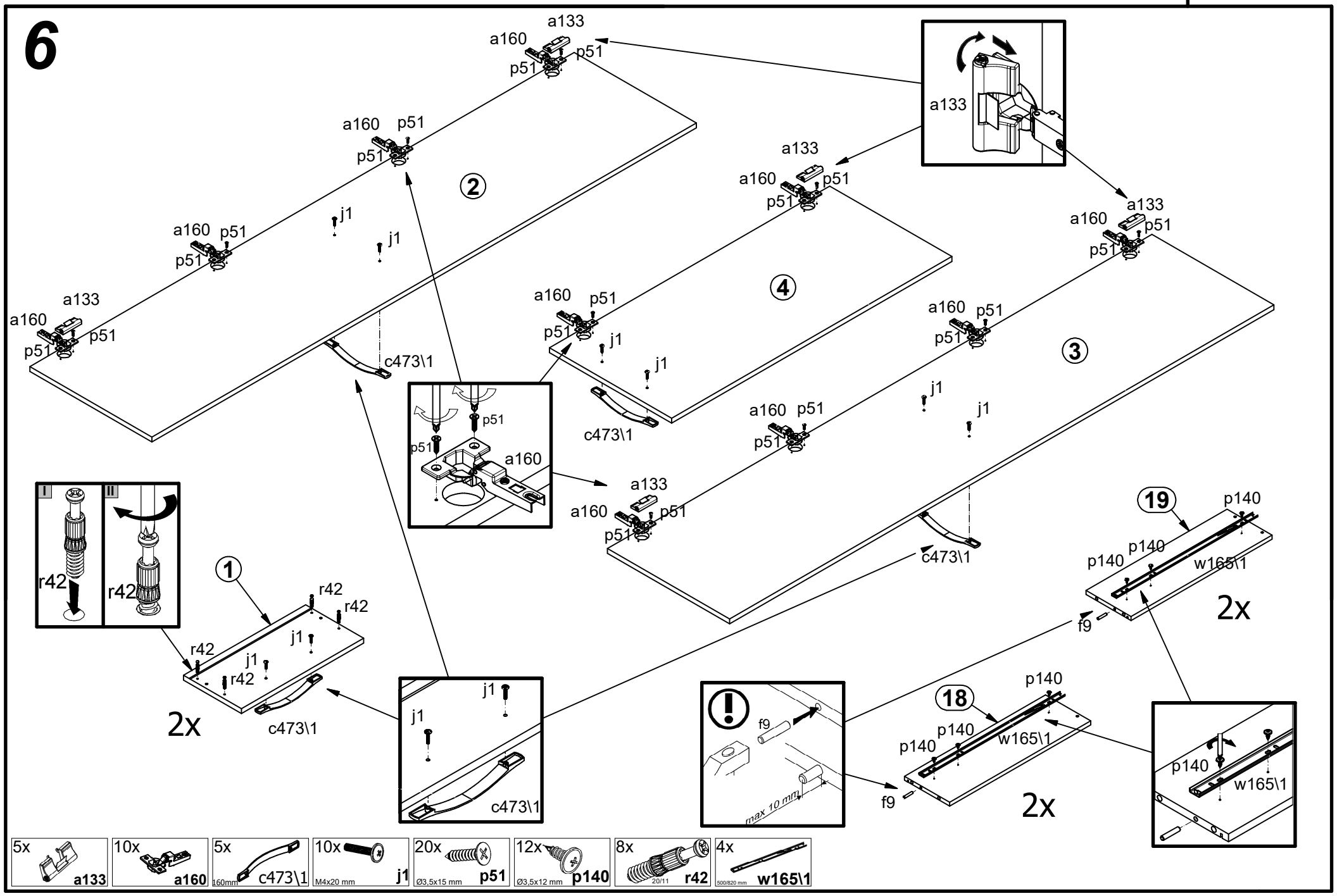
a133
a160
p51
j1
c473\1
r42
2
3
4
1
I
II
2x
a133
a160
p51
f9
max 10 mm
18
19
p140
w165\1
2x
5x a133
10x a160
5x c473\1 160mm
10x j1 M4x20 mm
20x p51 Ø3,5x15 mm
12x p140 Ø3,5x12 mm
8x r42 20/11
4x w165\1 500/820 mm

7

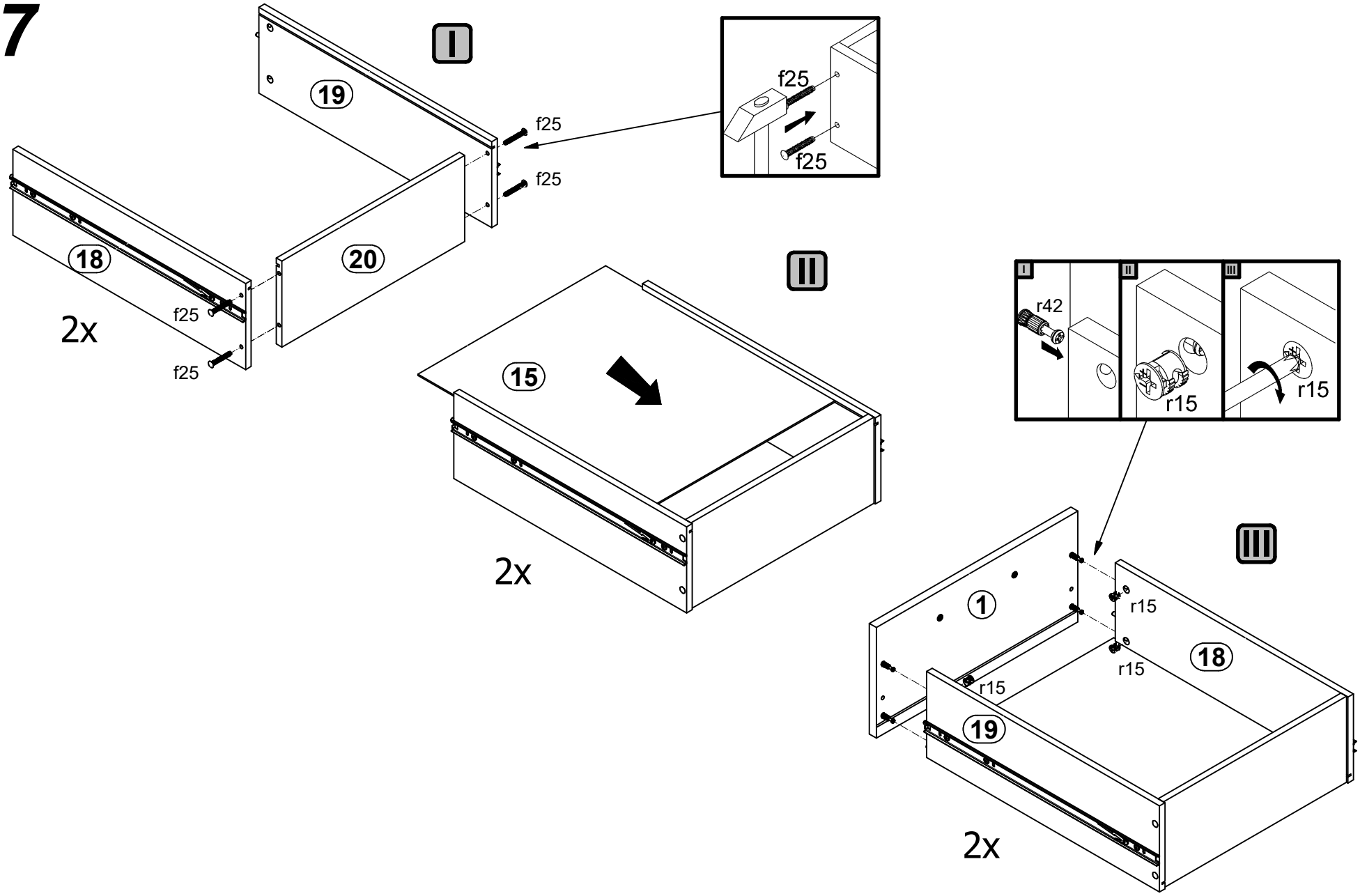

8x f25 Ø6,5x40 mm

8x r15 Ø12x10,5 mm #12

7

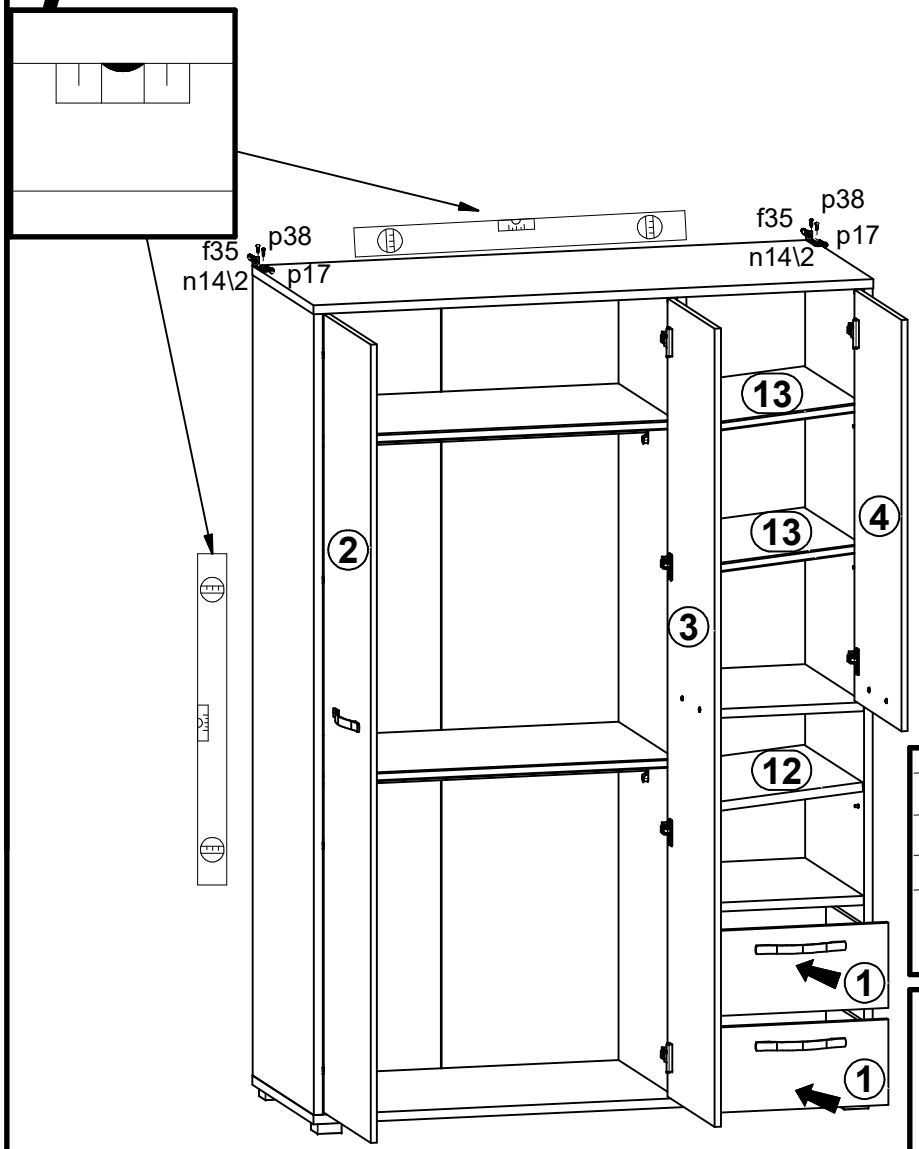
f35
p38
n14\2
p17
f35
p38
n14\2
p17
13
13
12
2
3
4
1
1

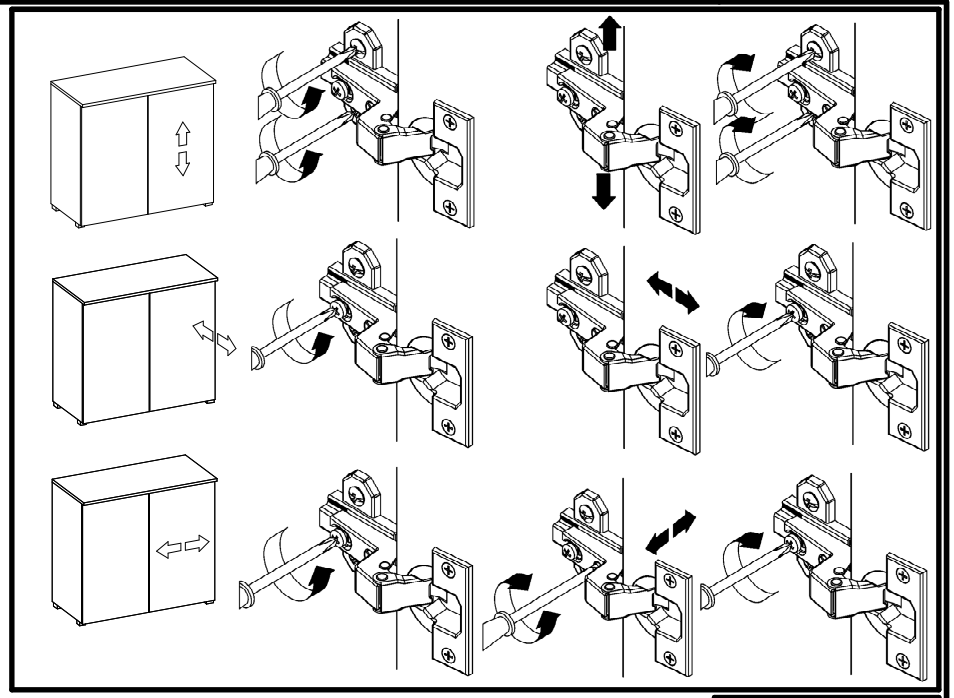

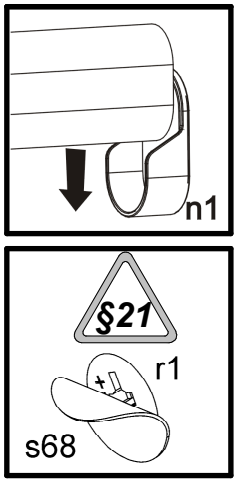
n1
§21
r1
s68

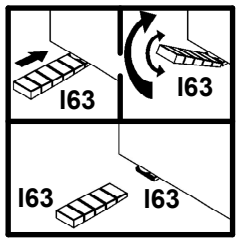
I63
I63
I63
I63

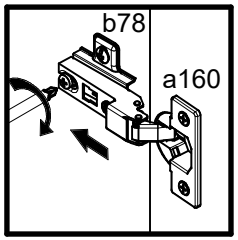
b78
a160

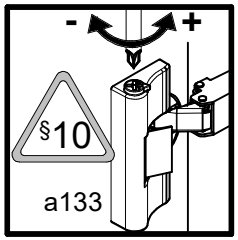
-
+
§10
a133

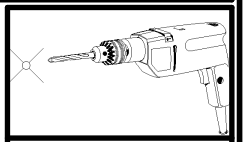

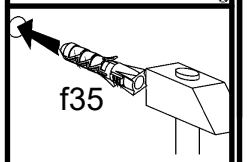
f35

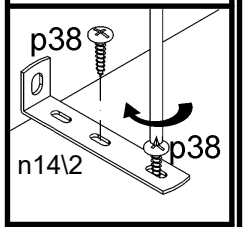
p38
n14\2
p38

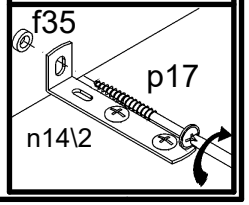
f35
p17
n14\2

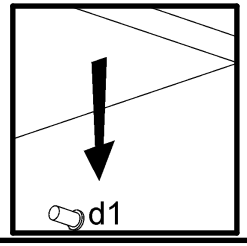
d1

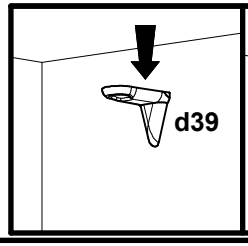
d39

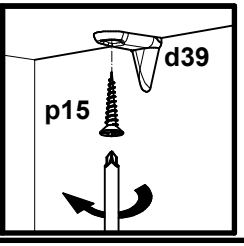
d39
p15

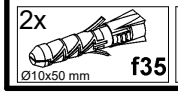
2x
Ø10x50 mm
f35

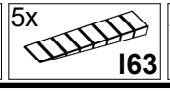
5x
I63

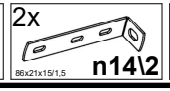
2x
86x21x15/1,5
n14\2

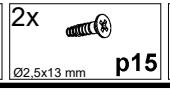
2x
Ø2,5x13 mm
p15

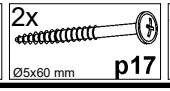
2x
Ø5x60 mm
p17

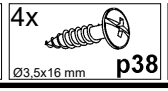
4x
Ø3,5x16 mm
p38

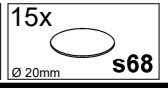
15x
Ø 20mm
s68